CALIFORNIA STATE BOARD OF
OPTOMETRY

Board Meeting

Friday, May 18, 2012

Department of Consumer Affairs
Sacramento, CA

STATE OF CALIFORNIA
dca
DEPARTMENT OF CONSUMER AFFAIRS

California State Board of Optometry
Board Meeting Notice
Friday, May 18, 2012

Department of Consumer Affairs – HQ 2
1747 N. Market Boulevard
First Floor Hearing Room
Sacramento, CA. 95834

9:00 a.m.

FULL BOARD OPEN SESSION

1. Call to Order – Roll Call – Establishment of a Quorum

2. Petition for Reinstatement of License
   Dr. Larry Franklin Thornton, O.D.

3. Petition for Reduction of Penalty or Early Termination of Probation
   Dr. Phillip Joseph McEldowney, O.D.

FULL BOARD CLOSED SESSION

4. Pursuant to Government Code Section 11126(c) (3), the Board Will Meet in Closed Session for Discussion and Possible Action on Disciplinary Matters

FULL BOARD OPEN SESSION

5. President's Report

6. Executive Officer's Report

7. Regulations
   A. Discussion and Possible Action Pertaining to the Comments Received During the 45-Day Comment Period of California Code of Regulations (CCR) §1575. Disciplinary Guidelines
   B. Consideration and Possible Action to Delegate to the Department of Consumer Affairs Authority to Receive Sponsoring Entity Registration Forms and to Registering Sponsoring Entities for Sponsored Free Health Care Event that Utilize the Services of Optometrists.

8. Legislation Update

9. Enforcement Report

10. Public Comment for Items Not on the Agenda
    Note: The Board may not discuss or take action on any matter raised during this public comment section, except to decide whether to place the matter on the agenda of a future meeting [Government Code Sections 11125, 11125.7(a)]

11. Suggestions for Future Agenda Items

12. Adjournment

Public Comments

Public comments will be taken on agenda items at the time the specific item is raised. Time limitations will be determined by the Chairperson. The Board may take action on any item listed on the agenda, unless listed as informational only. Agenda items may be taken out of order to accommodate speakers and to maintain a quorum.

NOTICE: The meeting is accessible to the physically disabled. A person who needs a disability-related accommodation or modification in order to participate in the meeting may make a request by contacting Krista Eklund at (916) 575-7170 or sending a written request to that person at the California State Board of Optometry 2450 Del Paso Road, Suite 105, Sacramento, CA 95834. Providing your request at least five (5) business days before the meeting will help ensure availability of the requested accommodation.

The Board of Optometry's mission is to serve the public and optometrists by promoting and enforcing laws and regulations which protect the health and safety of California's consumers, and to ensure high quality care.

Governor Edmund G. Brown Jr.
State of California

Denise D. Brown, Director
Department of Consumer Affairs

Lee Goldstein, OD, MPA
President

Alejandro Arredondo, OD
Vice President

Monica Johnson
Secretary

Donna Burke
Member

Alexander Kim, MBA
Member

Kenneth Lawenda, OD
Member

Fred Naranjo, MBA
Member

Ed Rendon, MA
Member

Board Staff

Mona Maggio
Executive Officer

Administration
Andrea Leiva
Elizabeth Bradley
Krista Eklund

Licensing
Jeff Robinson
Nancy Day
Elvia Melendrez

Enforcement
Lydia Bracco
Dillon Christensen
Christina Hasting
Cheree Kimball
Jessica Sieferman

California State Board of Optometry
2450 Del Paso Road, Suite 105
Sacramento, Ca 95834
(916) 575-7170 Office
(916) 575-7292 Fax

CALIFORNIA STATE BOARD OF OPTOMETRY

Memo

2450 Del Paso Road, Suite 105
Sacramento, CA 95834
(916) 575-7170, (916) 575-7292 Fax
www.optometry.ca.gov

To: Board Members

Date: May 18, 2012

From: Dr. Lee Goldstein, O.D.
Board President

Telephone: (916) 575-7170

Subject: **Agenda Item 1 – Call to Order**

Dr. Lee Goldstein, O.D., MPA, Board President, will call the meeting to order and will call roll to establish a quorum of the Board.

Dr. Lee Goldstein, O.D., MPA, Board President

Alejandro Arredondo, O.D., Board Vice President

Monica Johnson, Board Secretary

Donna Burke

Alexander Kim, MBA

Kenneth Lawenda, O.D.

Fred Naranjo, MBA

Ed Rendon, MA

Memo

2450 Del Paso Road, Suite 105
Sacramento, CA 95834
(916) 575-7170, (916) 575-7292 Fax
www.optometry.ca.gov

To: Board Members **Date:** May 18, 2012

From: Jessica Sieferman **Telephone:** (916) 575-7170

Subject: **Agenda Item 2. In the Matter of the Petition for Reinstatement of Revoked License No. OPT 6369 – Larry Franklin Thornton**

Dr. Larry Franklin Thornton, Petitioner, was issued Optometrist License Number 6369 by the Board on October 3, 1977. On December 31, 2002, the Board filed an Accusation against Petitioner charging him with violations of laws and regulations based on disciplinary action taken against Petitioner by the Kentucky Board of Optometric Examiners. Petitioner did not file a Notice of Defense and his license was revoked by a Default Decision on July 14, 2003.

This is Petitioner's third Petition for Reinstatement of his revoked license. The first was filed in 2006. On February 17, 2007, the Board denied his Petition for Reinstatement after a hearing before the Board on November 16, 2006. The denial was based upon the Board's finding that Petitioner failed to establish cause for the Board to grant the Petition for Reinstatement of his revoked license.

The second Petition for Reinstatement was filed in 2008. On October 10, 2008, the Board denied his Petition for Reinstatement after a hearing before the Board on September 3, 2008. The denial was based upon the Board's finding that Petitioner failed to establish cause for the Board to grant the Petition for Reinstatement of his revoked license.

The Petitioner is requesting the Board to reinstate his Optometrist License. He is not represented by an attorney.

Attached are the following documents submitted for the Board's consideration in the above referenced matter:

1. Petition for Reinstatement with Attachments
2. Copies of Decisions and Orders, Default Decision and Accusation
3. California Codes and Regulations Section 1516 – Criteria for Rehabilitation
4. Standards for Reinstatement or Reduction of Penalty
5. Certification of Non-Licensure

STATE AND CONSUMER SERVICES AGENCY — EDMUND G. BROWN JR., GOVERNOR

STATE BOARD OF OPTOMETRY
2450 DEL PASO ROAD, SUITE 105, SACRAMENTO, CA 95834
P (916) 575-7170 F (916) 575-7292 www.optometry.ca.gov

CALIFORNIA STATE BOARD OF OPTOMETRY

RECEIVED BY STATE BOARD OF OPTOMETRY
2011 DEC 20 AM 7:40

PETITION FOR REINSTATEMENT

A person whose certificate of registration has been revoked or suspended for more than one year may petition the Board to reinstate the certificate of registration after a period of not less than one year has elapsed from the date of the revocation or suspension. In determining whether the disciplinary penalty should be set aside and the terms and conditions, if any, which should be imposed if the disciplinary penalty is set aside, the Board may investigate and consider all activities of the petitioner since the disciplinary action was taken, the offense for which discipline was imposed, activity during the time the certificate of registration was in good standing and the petitioner's general reputation for truth, professional ability and good character.

PLEASE TYPE OR PRINT LIGIBLY

1. NAME (FIRST) LARRY (MIDDLE) Franklin (LAST) Thornton	CERTIFICATE OF REGISTRATION NO. 6369
2. ADDRESS (NUMBER) 1023 (STREET) S. Bonnie Brae Street	DATE OF BIRTH 6-20-53
(CITY) Los Angeles (STATE) CA (ZIP CODE) 90006	TELEPHONE - CELL (310) 650-5463
3. PHYSICAL DESCRIPTION (HEIGHT) 5'9" (WEIGHT) 169 LBS (EYE COLOR) Brown (HAIR COLOR) Dark Brown	
4. EDUCATION: NAME(S) OF SCHOOL(S) OR COLLEGES) OF OPTOMETRY ATTENDED	
NAME OF SCHOOL Indiana University School of optometry	
ADDRESS (NUMBER) (STREET) Bloomington, Indiana 47401	
(CITY) (STATE) (ZIP CODE)	
5. ARE YOU CURRENTLY LICENSED IN ANY OTHER STATE? (YES) NO	

STATE	LICENSE NO.	ISSUE DATE	EXPIRATION DATE	LICENSE STATUS
Kentucky	860 07	1977-Feb		INACTIVE

6. List locations, dates, and types of practice for 5 years prior to discipline of your California license.
*. PRACTICE LOCATIONS: N/A. LICENSE REVOKED SINCE 2002

LOCATION	DATE FROM	DATE TO	TYPE OF PRACTICE

39M-13

7. Are you or have you ever been addicted to the use of narcotics or alcohol? YES NO

8. Are you or have you ever suffered from a contagious disease? YES NO

9. Are you or have you ever been under observation or treatment for mental disorders, alcoholism or narcotic addiction? YES NO

10. Have you ever been arrested, convicted or pled no contest to a violation of any law of a foreign country, the United States, any state, or a local ordinance? you must include all convictions, including those that have been set aside under Penal Code Section 1203.4 (which includes diversion programs) YES NO

11. Are you now on probation or parole for any criminal or administrative violations in this state or any other state? (Attach certified copies of all disciplinary or court documents) YES NO

12. Have you ever had disciplinary action taken against your optometric license in this state or any other state? YES NO

IF YOU ANSWERED YES TO ANY OF THE ABOVE QUESTIONS, YOU MUST ATTACHMENT A STATEMENT OF EXPLANATION GIVING FULL DETAILS.

ON A SEPARATE SHEET OF PAPER PROVIDE THE FOLLOWING INFORMATION

13. List the date of disciplinary action taken against your license and explain fully the cause of the disciplinary action: 2002 - WORKED WITH OPTICIAN - 3 DAY EVERY TWO WKS. LICENSED REVOKED FOR 10 YRS!!

14. Explain fully why you feel your license should be restored, or the disciplinary penalty reduced. HAVE MET ALL BY DEMANDS BY THE BOARD & CALL CE REQUIREMENTS

15. Describe in detail your activities and occupation since the date of the disciplinary action; include dates, employers and locations. OCCUPATIONAL THERAPIST DESIGNER FRAME SALES WITH OPTICIAN FROM HIS RESIDENCE IN THE FIELD, HOME-CARE OF MY PERSONAL FRIEND

16. Describe any rehabilitative or corrective measures you have taken since your license was disciplined to support your petition. SEE PRIOR APPLICATION COMMUNITY SERVICE MANY HOURS.

17. List all post-graduate or refresher courses, with dates, location and type of course, you have taken since your license was disciplined. SEE ATTACHED PRINTOUT OF NO CE HOURS & TRANSCRIPTS

18. List all optometric literature you have studied during the last year.
OPTOMETRIC JOURNALS & SEE ATTACHED CE

19. List all continuing education courses you have completed since your license was disciplined.

20. List names, addresses and telephone numbers of persons submitting letters of recommendation accompanying this petition.

I declare under penalty of perjury under the laws of the State of California that the answers and information given by me in completing this petition, and any attachments, are true and I understand and agree that any misstatements of material facts will be cause for the rejection of this petition.

Date 12-14-2011 Signature [illegible] 6769

MAY I PLEASE HAVE MY LICENSE REINSTATED ??

All items of information requested in this petition are mandatory. Failure to provide any of the requested information will result in the petition being rejected as incomplete. The information will be used to determine qualifications for reinstatement, reduction of penalty or early termination of probation. The person responsible for information maintenance is the Executive Officer of the Board of Optometry at 2420 Del Paso Road, Suite 255, Sacramento, California, 95834. This information may be transferred to another governmental agency such as a law enforcement agency, if necessary to perform its duties. Each individual has the right to review the files or records maintained on them by our agency, unless the records are identified confidential information and exempted by Section 1798.3 of the Civil Code.

RECEIVED BY
STATE BOARD OF OPTOMETRY

2011 NOV 21 AM 11:47

Kentucky Black Optometrist

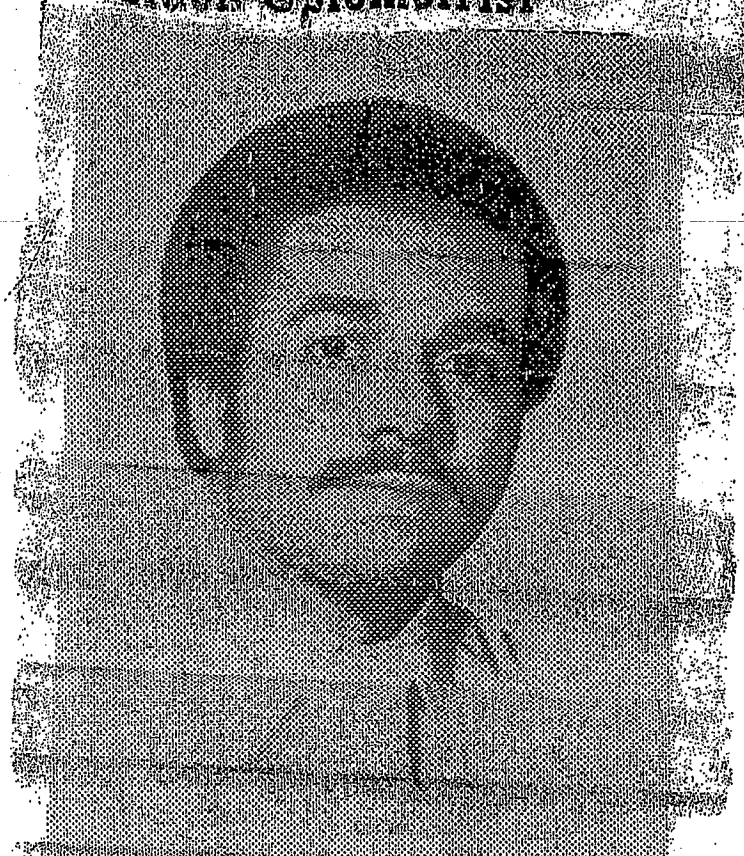

Dr. Larry Franklin Thornton

Dr. Larry Franklin Thornton, the son of Rev. and Mrs. George Washington Thornton, Jr. is being acknowledged for completing the study of optometry at Indiana University School of Optometry. He was anointed with a Doctor of Optometry degree May 9, 1976 at the age of 22. He is the youngest black optometrist to graduate in his class and in Kentucky, the only one of his race. He is the nation's youngest Doctor of Optometry.

Dr. Thornton's wife, Imogene Bankston Thornton, attended Eastern Kentucky University and is making plans to work with her husband in private practice in the near future.

RECEIVED BY
STATE BOARD OF OPTOMETRY

2011 NOV 21 AM 11:47

Attention: Director of Continuing Education
California Board of Optometry

RE: License No. 6369

It has been a while since I had a meeting with the California Board of Optometry. The last date was in June 2009.

I am a victim of a hit-and-run. It happened while I was riding my bicycle. The doctor told me I had less than a fifty percent chance to survive. I had severe head and body trauma. The neurologist suggested brain surgery but I refused.

It has taken a lot of physical and mental rehabilitation to regroup. I wanted to have a meeting with the Board approximately a year ago. I have $70,000.00 in hospital bills I wish to bring to the meeting to substantiate the accident.

I really need my license to exist in this rigid economy. My retirement funds are almost depleted. I want to attempt to back my bill I owe to California Hospital and UCLA, Los Angeles. The doctors at both hospitals saved my life!

I have done everything you demanded to have my license reinstated. Please understand I am a qualified optometrist with teaching experience and practical experience exceeding thirty-six years.

After ten years with a license revocation for a light penalty, I hope there are no additional demands or requirements to be reinstated.

Thank you.

Sincerely,

Larry Franklin Thornton
Optometrist
License No. 6369

Attachment

Ps: I would appreciate it if you would give me a letter showing the 100 hours I took at Pennsylvania College of Optometry. I need it to help count toward my certification when I take the exam for the Southern California Board of Optometry and to qualify me to use the therapeutic pharmaceuticals in the State of California.

HOURS	COURSE TITLE	DATE
1	Providing optimal optics for your astigmatic cataract patients	08/24/2010
2	Imaging and instrumentation in contact lens practice	10/27/2008
2	Preventing contact lens changes for presbyopes	12/01/2004
2	Prescribing soft contact lens (toxic)	03/31/2005
2	Examining the contact lens patient	01/20/2005
2	Current trends in daily disposable contact lens	09/28/2005
1	New approaches for reducing risk macular degeneration	05/05/2009
1	Concurrent treatment for glaucoma and ocular surface disease	05/28/2009
1	"Seizing Profitable Opportunities in the Treatment and Management of Ocular Allergy"	08/03/2009
1	Educating patients about ultraviolet radiation	04/06/2009
6	Ocular Disease – Part I	03/06/2006
1	"Successful Manager of Complicated Glaucoma Cases"	07/28/2009
7	Cornea and Cataract C.E. Program and Optometric Boot Camp	04/18/2010
7	Celebration of The Lifetime Achievements of Dr. Michael Rouse C.E. Program	02/14/2010
12	Current Concepts in Refractive Surgery	08/21/1994
3 Total Of 28 Hours	SCCC at South Bay (Torrance Marriott) (3 hours) SCCC (7 hours) SCCC (4 hours) SCCC (7 hours) SCCC (7 hours) SCCC	07/07/2005 05/10/2004 05/13/2004\ 05/14/2004 07/12/2004 08/2005
2	Lens Program – Look at the Lids	01/11/2009
2	A New Generation of Contact Lens Care	04/13/2004
2	Avoiding Contact Lens Dropouts	09/20/2004
1	Get the Full Picture With Ultra U. of E. Field Imaging	11/03/2004
2	Expanding Refractive Options	02/01/2005
7	Potpourri of C.E. With a Focus on Primary Care	08/22/2010
4	Ocular Disease – Part II	07/10/2011
Total 110 Hours	Dermatology: General and Neoplastic Disease – 2010-2011 V.A. Optical Grand Rounds Evaluation, management of patients with special needs, examining the pediatric population, low vision, rehabilitation modal contact lens update --- optical prescribing for pregnant or lactating patients, machetin techniques to boost practice during recession times.	

California State University
Los Angeles
College of Arts and Letters
Department of Philosophy
5151 State University Drive
Los Angeles, CA 90032-8114

March 12, 2009

Dr. Larry Franklin Thornton audited sessions of Philosophy Course 429, Section #1, Call #17507, Bio-Ethics class held on Tuesday and Thursday 9:50 – 11:30 a.m., Room #ET 126, Instructor Ann Gary.

Signature of Instructor
For verification:

Ann Gary

Phone Number: 323-343-4176

Student:

Larry F. Thornton

_____

Winter 2009 Class Schedule

Course	Sec#	Call #	Title	Day & Time	Room #	Instructor	Units	#ST	Miscellaneous Information
PHIL 151	1	10337	PHIL IDEA:Know+Real	MW 1:30-3:10	KH B2006	Kaiser	4	60	LL
PHIL 151	2	10338	PHIL IDEA:Know+Real	TR 1:30-3:10	KH B2006	Pitt	4	60	
PHIL 152	1	10339	PHIL IDEA:Human Values	MW 9:50-11:30	KH B2009	Albergate	4	35	Room change from KH B4019
PHIL 152	2	10340	PHIL IDEA:Human Values	MW 4:20-6:00	KH B4019	Tallifer	4	35	
PHIL 152	3	12071	PHIL IDEA: Human Values	TR 11:40-1:20	KH B2006	Price	4	35	
PHIL 160	1	10341	CRITICAL THINKING	MW 9:50-11:30	BIOS 144	Atta	4	150	LL
PHIL 160	2	10342	CRITICAL THINKING	MW 11:40-1:20	KH B2006	Kaiser	4	60	
PHIL 160	3	10343	CRITICAL THINKING	MW 1:30-3:10	KH B4019	Conway	4	35	
PHIL 160	4	10344	CRITICAL THINKING	MW 6:10-7:50	KH B2007	Atta	4	35	
PHIL 160	5	10345	CRITICAL THINKING	TR 9:50-11:30	KH LH1	Houts	4	150	LL
PHIL 160	6	10346	CRITICAL THINKING	TR 11:40-1:20	KH B4019	Levy	4	35	
PHIL 160	7	12072	CRITICAL THINKING	TR 1:30-3:10	KH B4019	Gomez	4	35	
PHIL 160	8	17292	CRITICAL THINKING	TR 4:20-6:00	KH B2006	Gomez	4	35	
PHIL 200	1	10347	Intro to Comparative Religions	TR 8:00-9:40	FA 244	Price	4	75	Crosslisted with RELS 200-1
PHIL 200	2	10348	Intro to Comparative Religions	TR 11:40-1:20	KH B4015	Faculty	4	10	RELS
PHIL 220	1	10349	Honors: Moral Social Issues Multicul Soc	MW 9:50-11:30	ET A126	Vernallis	4	35	Honors permit required
PHIL 220	2	10350	Moral Social Issues Multicul Soc	MW 11:40-1:20	ET A126	Vernallis	4	35	
PHIL 230	1	10351	Meaning of Human Life	TR 11:40-1:20	KH B2014	Jarrett	4	35	
PHIL 250	1	10353	Intro Symbolic Logic	MW 11:40-1:20	KH B3020	Houts	4	30	Room change from KH D3068
PHIL 250	2	10354	Intro Symbolic Logic	TR 9:50-11:30	KH B3020	Levy	4	30	Room change from KH B3007
PHIL 250	3	11838	Intro Symbolic Logic	TR 4:20-6:00	KH B4019	Levy	4	35	
PHIL 300	1	10417	Philosophical Research and Writing	TR 4:20-6:00	KH B2007	Bettcher	4	35	
PHIL 313	1	10355	History of Modern Philosophy	MW 4:20-6:00	KH B2006	Shim	4	35	
PHIL 321	1	10356	Ancient Thought & Mod Legacy	TR 11:40-1:20	KH B2007	Farner	4	35	
PHIL 323	1	10357	Human Diversity & Justice	MW 9:50-11:30	KH D2072	Tallifer	4	75	LL
PHIL 323	2	10418	Human Diversity & Justice	MW 4:20-6:00	KH B2007	Albergate	4	35	
PHIL 325	1	10358	Violence and Ethics	TR 11:40-1:20	ET A126	Abed	4	60	
PHIL 327	1	10359	Philosophy, Gender & Culture	MW 11:40-1:20	SH E184	Conway	4	150	
PHIL 327	2	10360	Philosophy, Gender, Culture	TR 4:20-6:00	SH E184	Conway	4	75	
PHIL 372	1	10361	Philosophy & the Emotions	TR 9:50-11:30	KH D2072	Farner	4	75	LL
PHIL 372	2	16115	Philosophy & the Emotions	TR 1:30-3:10	KH B2007	Jarrett	4	35	
PHIL 373	1	10362	Themes of Adult Life	MW 1:30-3:10	KH D2072	Munoz	4	75	LL
PHIL 380	1	10363	Ancient & Modern Science	MW 4:20-6:00	PS 155	Thomas	4	10	Cross w/Hist 280 & Chem 380N
PHIL 385	1	11843	Measurement of Human Difference	TR 11:40-1:20	KH D2072	Atta	4	75	*LL Crosslisted w/Anth 385-01.*
PHIL 385	2	12089	Measurement of Human Difference	TR 1:30-3:10	SH C264	Faculty	4	10	
PHIL 395	1	17526	Phil in Practice: Interns & Serv Lrn	TBA			1	10	Dept. permit required
PHIL 395	2	17527	Phil in Practice: Interns & Serv Lrn	TBA			2	10	Dept. permit required
PHIL 395	3	17528	Phil in Practice: Interns & Serv Lrn	TBA			3	10	Dept. permit required
PHIL 410	1	16116	Social & Political Philosophy	MW 1:30-3:10	KH B2007	Bishop	4	30	
PHIL 413	1	17508	Issues in Feminist Philosophy	TR 1:30-3:10	ET A126	Garry	4	30	Crosslisted with WOMN 413-01
PHIL 429	1	17507	Bioethics	TR 9:50-11:30	ET A126	Garry	4	30	Student
PHIL 445	1	17840	Existentialism	MW 11:40-1:20	KH B4019	Shim	4	30	
PHIL 450	1	17530	Plato	MW 9:50-11:30	KH B2006	Mendell	4	30	
PHIL 470	1	12100	Theory of Knowledge	TR 11:40-1:20	KH B3020	Talbot	4	30	
PHIL 480	1	12108	Philosophy of Language	W 6:10-10:00	ET A126	Balaguer	4	30	
PHIL 495	1	17508	Special Topic: Film	M 6:10-10:00	ET A126	Vernallis	4	30	
PHIL 495	2	17529	Seminar: Philosophy of Mind	TR 4:20-6:00	SH C338	Pitt	4	30	PHIL533
PHIL 495	3	17880	ST: Ancient Greek: The Language	MW 4:20-6:00	ET C154	Mendell	4	15	
PHIL 499	1	16124	UNDERGRAD DIR STUDY	TBA			1	10	Dept. permit required
PHIL 499	2	17514	UNDERGRAD DIR STUDY	TBA			2	10	Dept. permit required
PHIL 499	3	17515	UNDERGRAD DIR STUDY	TBA			3	10	Dept. permit required
PHIL 499	4	17583	UNDERGRAD DIR STUDY	TBA			4	10	Dept. permit required
PHIL 525	1	16118	Seminar: Philosophy of Science	R 6:10-10:00	KH B2006	Gomez	4	20	
PHIL 533	*1*		*Philosophy of Mind*	*TR 4:20-6:00*	*SH C338*	*Pitt*	*4*	*15*	*Not yet on GET: Students should register for 495-2*
PHIL 544	1	17510	Sem: Anarchism & State Legitimacy	T 6:10-10:00	KH B2007	Abed	4	20	
PHIL 581	1	16120	Prol. in Teaching Philosophy	TBA			1	10	Dept. permit required
PHIL 581	2	17531	Prol. in Teaching Philosophy	TBA			2	10	Dept. permit required
PHIL 581	3	17532	Prol. in Teaching Philosophy	TBA			3	10	Dept. permit required
PHIL 581	4	17533	Prol. in Teaching Philosophy	TBA			4	10	Dept. permit required
PHIL 596	1	16125	Comprehensive Exam	TBA			0	10	Dept. permit required
PHIL 598	1	16121	Grad Direct Study	TBA			1	10	Dept. permit required
PHIL 598	2	10364	Grad Direct Study	TBA			2	10	Dept. permit required
PHIL 598	3	17536	Grad Direct Study	TBA			3	10	Dept. permit required
PHIL 598	4	17537	Grad Direct Study	TBA			4	10	Dept. permit required
PHIL 599	1	16122	Thesis	TBA			1	10	Dept. permit required
PHIL 599	2	16123	Thesis	TBA			2	10	Dept. permit required
PHIL 599	3	12107	Thesis	TBA			3	10	Dept. permit required
PHIL 599	4	17538	Thesis	TBA			4	10	Dept. permit required
PHIL 599	5	17539	Thesis	TBA			5	10	Dept. permit required
PHIL 599	6	17540	Thesis	TBA			6	10	Dept. permit required
PHIL 900	1	17541	Graduate Studies	TBA			0	10	Permission needed from Dept. for fee purposes only. Limited to Graduate students.

Revised 10-23-08

SUBJECT TO CHANGE!

SOUTHERN CALIFORNIA COLLEGE OF OPTOMETRY

Office of Continuing Education
2575 Yorba Linda Boulevard • Fullerton, CA 92831-1699
714/449-7442 • Fax 714/992-7809 • email: satkinson@scco.edu

Larry Thornton, O.D.
4074 Leimert Blvd.
Los Angeles CA 90008

CERTIFICATION OF CONTINUING EDUCATION CREDIT

This will certify that: **Larry Thornton, O.D.** Opt. License No: 6369

Attended: Fall Optometry Update

Date: **Sunday, November 14, 2010**

Instructor(s) & Lecture Information:

Morning Presentations
The Older Driver - J. Lee, O.D.
Evaluation & Management of Patients with Special Needs - C. Heyman, O.D.
A Survival Handbook: Examining the Pediatric Population - R. Chu, O.D., M.S.

Afternoon Presentations
Highlights of the OD/OT Low Vision Rehabilitation Model - S. Dang, O.D. & R. Kammer, O.D.
Contact Lens Update - B. Larson, O.D.
Optometrist Prescribing for Pregnant or Lactating Patients - R. Jankowski, Pharm.D.
99 Marketing Ideas to Boost Your Practice in a Recession - P. Shaw-McMinn, O.D.

Sponsored and Administered by: The Department of Continuing Education
Southern California College of Optometry

Total Continuing Education Credits Earned: 7

Susan Atkinson
Director, Department of Continuing Education
Southern California College of Optometry

SOUTHERN CALIFORNIA COLLEGE OF OPTOMETRY
Continuing Education Department
2575 Yorba Linda Boulevard
Fullerton, CA 92831-1699
714/449-7442 • FAX 714/992-7809
Email: satkinson@scco.edu

Larry Thornton, O.D.
4074 Leimert Blvd.
Los Angeles CA 90008

CE Registration Confirmation Receipt

Title:	Fall Optometry Update
Date & Time:	Sunday, November 14th, 2010 - 8:30 am - 5:00 pm
Location:	Southern California College of Optometry Richard L. Hopping Academic Center 2575 Yorba Linda Blvd Fullerton, CA 92831
CE Credit/s:	7
License #:	6369

Course Fee:	$87.50
Amount Rec'd:	$87.50
Balance Due:	$0.00

Thank you!

Please visit our website www.scco.edu/ce/ to view our CE Course Schedule

Society meeting

SOUTHERN CALIFORNIA COLLEGE OF OPTOMETRY

Office of Continuing Education
2575 Yorba Linda Boulevard • Fullerton, CA 92831-1699
714/449-7442 • Fax 714/992-7809 • email: satkinson@scco.edu

Larry Thornton, O.D.
8920 Pico Blvd Suite B
Los Angeles CA 90035

CERTIFICATION OF CONTINUING EDUCATION CREDIT

This will certify that: Larry Thornton, O.D.
OPT. LICENSE NO: 6369

Attended: **SCCO at South Bay**
Instructor(s) George Comer, O.D., Long Tran, O.D., Loretta Ng, O.D., John Maher, O.D.
August 7, 2005
Torrance Marriott
3635 Fahsion Way
Torrance, CA 90503

Sponsored and Administered by:
The Department of Continuing Education
Southern California College of Optometry

Total Continuing Education Credits Earned: 3

Sue Atkinson
Director, Department of Continuing Education
Southern California College of Optometry

For those who are TPA certified optometrists, this program provides 5 hours in the diagnosis, treatment & managment of ocular disease, & 2 hours of Other as per AB2464 effective January 1, 2005

1904-2004: A PROUD PAST, A VISIONARY FUTURE

Susan J. Atkinson
Director, Continuing Education

714.449-7442
Fax 714.992-7809
satkinson@scco.edu

Southern California College of Optometry

August 18, 2005

Larry Thornton, O.D.
8920 Pico Blvd., Suite B
Los Angeles, Ca 90035

RE: CA License No. 6369 Credit for courses attended in 2004 and 2005

Dear Dr.Thornton:

You have attended 28 hours of continuing education hour here at SCCO in 2004 and 2005. We have received payment of $190.00 toward these course credits. In view of your special circumstances, and your desire to retain your license, the college is willing to take this into consideration and will waive the balance of fees. Please understand that if you attend any future courses, we will require full payment in order to give you credit and add to your transcript.

We have attached the credit letters for the courses that are supported by your signature on the daily roster. After we input this information into our transcription system, we will send you a current transcript at no charge.

If you have any questions, please do not hesitate to contact me.

Course Attendance

May 10, 2004	3 CE Credits
May 13, 2004	7 CE Credits
May 14, 2004	4 CE Credits
July 12, 2004	7 CE Credits
August 7, 2005	7 CE Credits

Sincerely,

Susan Atkinson
Director Continuing Education

Enclosures
Resent 2/1/06Also sent via fax (310) 276-6811

Pennsylvania College of Optometry

IRVING BENNETT BUSINESS & PRACTICE MANAGEMENT CENTER
8360 OLD YORK ROAD • ELKINS PARK, PA 19027 • (215) 780-1235

Larry Thornton, OD
1555 W. Sepulifida Blvd #R-2
Torrance, CA 90501

To be completed by O.D.

O.D. License Number: #63369

If required by your appropriate State Agency, please fill out before mailing this certified form to your State to earn your CE credits. Feel free to make a copy for your records.

NOTE TO AGENCIES REQUIRING CERTIFICATION
THIS FORM IS NOT VALID UNLESS EMBOSSED OR STAMPED WITH THE OFFICIAL SEAL OF THE PENNSYLVANIA COLLEGE OF OPTOMETRY

To be completed by Bennett Center

This is to certify that the above-named individual has attained *two (2)* clock hoursof Continuing Education Course Work offered by the Center through the special supplement correspondence course in Optometric Management magazine.

Course Title: **"Lens Problem? Look at the Lids"**
(COPE ID #10884-CL
by Neil A. Pence, OD, FAAO and Dean A. VanNasdale, OD

OPTOMETRIC Management

Date: February 2004
Test Graded: November 11, 2004

PENNSYLVANIA COLLEGE OF OPTOMETRY
C.E.P.C.O.
PHILADELPHIA, PA

Pennsylvania College of Optometry

IRVING BENNETT BUSINESS & PRACTICE MANAGEMENT CENTER
8360 OLD YORK ROAD • ELKINS PARK, PA 19027 • (215) 780-1235

Larry Thornton, OD
1555 W. Sepulifida Blvd #R-2
Torrance, CA 90501

To be completed by O.D.

O.D. License Number:

If required by your appropriate State Agency, please fill out before mailing this certified form to your State to earn your CE credits. Feel free to make a copy for your records.

NOTE TO AGENCIES REQUIRING CERTIFICATION
THIS FORM IS NOT VALID UNLESS EMBOSSED OR STAMPED WITH THE OFFICIAL SEAL OF THE PENNSYLVANIA COLLEGE OF OPTOMETRY

To be completed by Bennett Center

This is to certify that the above-named individual has attained **two** clock hours of Continuing Education Course Work offered by the Center through the correspondence course in Optometric Management magazine.

Course Title: **"A New Generation of Contact Lens Care."**
(COPE ID #13145-CL)
By Jennifer Smythe, OD, MS, FAAO

OPTOMETRIC Management

PENNSYLVANIA COLLEGE OF OPTOMETRY C.E.P.C.O. PHILADELPHIA, PA

Date: March 2005 Issue (CIBA)
Test Graded: April 13, 2005

Pennsylvania College of Optometry

IRVING BENNETT BUSINESS & PRACTICE MANAGEMENT CENTER
8360 OLD YORK ROAD • ELKINS PARK, PA 19027 • (215) 780-1235

Larry Thornton
1555 W. Sepulifida Blvd #R-2
Torrance, CA 90501

To be completed by O.D.

O.D. License Number: [illegible]

If required by your appropriate State Agency, please fill out before mailing this certified form to your State to earn your CE credits. Feel free to make a copy for your records.

NOTE TO AGENCIES REQUIRING CERTIFICATION
THIS FORM IS NOT VALID UNLESS EMBOSSED OR STAMPED WITH THE OFFICIAL SEAL OF THE PENNSYLVANIA COLLEGE OF OPTOMETRY

To be completed by Bennett Center

This is to certify that the above-named individual has attained ***two (2)*** clock hours of Continuing Education Course Work offered by the Center through the special supplement correspondence course in Optometric Management magazine.

Course Title: **"Avoiding Contact Lens Dropouts"**
By Heidi Wagner, OD
COPE ID #11158-CL

OPTOMETRIC Management

Date: **April 2004**
Test Graded: September 20, 2004

Pennsylvania College of Optometry

IRVING BENNETT BUSINESS & PRACTICE MANAGEMENT CENTER
8360 OLD YORK ROAD • ELKINS PARK, PA 19027 • (215) 780-1235

Larry Thornton
1555 Sepulueda Blvd, R #2
Torrance, CA 90501

To be completed by O.D.

O.D. License Number: HG3 69

If required by your appropriate State Agency, please fill out before mailing this certified form to your State to earn your CE credits. Feel free to make a copy for your records.

NOTE TO AGENCIES REQUIRING CERTIFICATION
THIS FORM IS NOT VALID UNLESS EMBOSSED OR STAMPED WITH THE OFFICIAL SEAL OF THE PENNSYLVANIA COLLEGE OF OPTOMETRY

To be completed by Bennett Center

This is to certify that the above-named individual has attained **one *(1)*** clock hours of Continuing Education Course Work offered by the Center through the special supplement correspondence course in Optometric Management magazine.

Course Title: **"Get the Full Picture With Ultra Widefield Imaging"**
By William L. Jones, OD, FAAO
COPE ID # 11534-GO

OPTOMETRIC Management

PENNSYLVANIA COLLEGE OF OPTOMETRY
C.E.P.C.O.
PHILADELPHIA, PA

Date: May 2004
Test Graded: November 3, 2004

Pennsylvania College of Optometry

IRVING BENNETT BUSINESS & PRACTICE MANAGEMENT CENTER
8360 OLD YORK ROAD • ELKINS PARK, PA 19027 • (215) 780-1235

Larry Thornton, OD
8920 W Pico Blvd, Ste. B
Los Angeles, CA 90035

To be completed by O.D.

O.D. License Number: #6369

If required by your appropriate State Agency, please fill out before mailing this certified form to your State to earn your CE credits. Feel free to make a copy for your records.

NOTE TO AGENCIES REQUIRING CERTIFICATION
THIS FORM IS NOT VALID UNLESS EMBOSSED OR STAMPED WITH THE OFFICIAL SEAL OF THE PENNSYLVANIA COLLEGE OF OPTOMETRY

To be completed by Bennett Center

This is to certify that the above-named individual has attained **two (2)** clock hours of Continuing Education Course Work offered by the Center through the special supplement correspondence course in Optometric Management magazine.

Course Title: **"Expanding Refractive Options"**
(COPE ID #13723-GO)
by Kirk L. Smick, OD, FAAO

OPTOMETRIC Management

Date: May 2005 (Advanced Medical Optics, Inc)
Test Graded: July 1, 2005

PENNSYLVANIA COLLEGE OF OPTOMETRY C.E.P.C.O. PHILADELPHIA, PA

SOUTHERN CALIFORNIA COLLEGE OF OPTOMETRY

Office of Continuing Education
2575 Yorba Linda Boulevard • Fullerton, CA 92831-1699
714/449-7442 • Fax 714/992-7809 • email: satkinson@scco.edu

Larry F. Thornton, O.D.
4074 Leimert Blvd.
Los Angeles CA 90008

CERTIFICATION OF CONTINUING EDUCATION CREDIT

This will certify that: **Larry F. Thornton, O.D.** Opt. License No: 6369

Attended: Potpourri of CE with A Focus on Primary Care

Date: **Sunday, August 22nd, 2010**

Instructor(s) & Lecture Information:

Morning Presentations
Innovations in Contact Lens Design and Prescribing - Mathew Lampa, O.D.
The Who, What, When, Where and Why of Custom Soft Contact Lens Prescribing - Mathew Lampa, O.D.
CL Compliance in the Primary Care Practice - Eunice Myung Lee, O.D.
Impact of Medications in Geriatric Eye Care - John Lee, O.D.

Afternoon Presentations
The Eye: The Good, the Bad and the Ugly from 0-100 "What It is and What to do With It" - Lance Siegel, M.D.
Corneal Dysgenesis and Degenerations - Franklin "Skip" Lusby, M.D.

Sponsored and Administered by: The Department of Continuing Education
Southern California College of Optometry

Total Continuing Education Credits Earned: 7

Susan Atkinson
Director, Department of Continuing Education
Southern California College of Optometry

Pennsylvania College of Optometry

at Salus University

IRVING BENNETT BUSINESS & PRACTICE MANAGEMENT CENTER
8360 OLD YORK ROAD • ELKINS PARK, PA 19027 • (215) 780-1235

Larry Thornton, OD
4074 Leimert Blvd.
Los Angeles, CA 90008

To be completed by O.D.

O.D. License Number: _____

If required by your appropriate State Agency, please fill out before mailing this certified form to your State to earn your CE credits. Feel free to make a copy for your records.

NOTE TO AGENCIES REQUIRING CERTIFICATION
THIS FORM IS NOT VALID UNLESS EMBOSSED OR STAMPED WITH THE OFFICIAL SEAL OF THE PENNSYLVANIA COLLEGE OF OPTOMETRY

To be completed by Bennett Center

This is to certify that the above-named individual has attained **One (1)** clock hour of Continuing Education Course Work offered by the Center through the correspondence course in Optometric Management magazine.

Course Title: **"New Approaches for Reducing Risk Macular Degeneration"**
(COPE #23778-PS)
By Lloyd I. Snider, OD

OPTOMETRIC Management

Date: November 2008 MARCO
Test Graded: May 5, 2009

PENNSYLVANIA COLLEGE OF OPTOMETRY
C.E.P.C.O.
PHILADELPHIA, PA

Pennsylvania College of Optometry
at Salus University

IRVING BENNETT BUSINESS & PRACTICE MANAGEMENT CENTER
8360 OLD YORK ROAD • ELKINS PARK, PA 19027 • (215) 780-1235

Larry Thornton, OD
4074 Leimert Blvd.
Los Angeles, CA 90008

To be completed by O.D.

O.D. License Number: _____

If required by your appropriate State Agency, please fill out before mailing this certified form to your State to earn your CE credits. Feel free to make a copy for your records.

NOTE TO AGENCIES REQUIRING CERTIFICATION
THIS FORM IS NOT VALID UNLESS EMBOSSED OR STAMPED WITH THE OFFICIAL SEAL OF THE PENNSYLVANIA COLLEGE OF OPTOMETRY

To be completed by Bennett Center

This is to certify that the above-named individual has attained **One (1)** clock hour of Continuing Education Course Work offered by the Center through the correspondence course in Optometric Management magazine.

Course Title: **"Seizing Profitable Opportunities in the Treatment and Management of Ocular Allergy"**
(COPE #24362-AS)
By Arthur B. Epstein, OD, John M. B. Rumpakis, OD

OPTOMETRIC Management

Date: February 2009
Test Graded: August 3, 2009

PENNSYLVANIA COLLEGE OF OPTOMETRY
C.E.P.C.O.
PHILADELPHIA, PA

SOUTHERN CALIFORNIA COLLEGE OF OPTOMETRY

Office of Continuing Education
2575 Yorba Linda Boulevard • Fullerton, CA 92831-1699
714/449-7442 • Fax 714/992-7809 • email: satkinson@scco.edu

Larry F. Thornton, O.D.
4074 Leimert Blvd.
Los Angeles CA 90008

CERTIFICATION OF CONTINUING EDUCATION CREDIT

This will certify that: **Larry F. Thornton, O.D.** Opt. License No: 6369

Attended: Celebration of The Lifetime Achievements of Dr. Michael Rouse CE Program

Date: **Sunday, February 14th, 2010**

Instructor(s) & COPE Information:

R. London, M.A., O.D. - Functional Vision Loss – 22957-GO
R. London, M.A., O.D. - Binocular Vision for $200 Please! – 27612-FV
S. Cotter, O.D, M.S. - Evolving Eye Care for Children – 19765-NO
M. Scheiman, O.D. - Evidence-Based Treatment of Convergence Insufficiency – 27527-FV
L. Siegel, M.D. - Treating Common Eye Diseases in Children – 27524-FV
D. Sendrowski, O.D. - Rouse House Jeopardy – 21618-AS
T. Edrington, O.D., M.S. - Monovision Meets Binocular Vision – 27531-CL

Sponsored and Administered by: The Department of Continuing Education
Southern California College of Optometry

Total Continuing Education Credits Earned: 7

Susan Atkinson
Director, Department of Continuing Education
Southern California College of Optometry

SOUTHERN CALIFORNIA COLLEGE OF OPTOMETRY

Office of Continuing Education
2575 Yorba Linda Boulevard • Fullerton, CA 92831-1699
714/449-7442 • Fax 714/992-7809 • email: satkinson@scco.edu

Larry Thornton, O.D.
4074 Leimert Blvd.
Los Angeles CA 90008

CERTIFICATION OF CONTINUING EDUCATION CREDIT

This will certify that: **Larry Thornton, O.D.** Opt. License No: 6369

Attended: Cornea & Cataract CE Program and Optometric Boot Camp

Date: **Sunday, April 18th, 2010**

Instructor(s) & Lecture Information:

Drs. Pirnazar and D. Tran - Cataract Panel Discussion: What Every Commanding Officer Needs to Know About Cataracts!
Dr. L. Tran - Corneal Dystrophies and Degenerations
Drs. Carver & Hua - In the Trenches of Co-managing Cataracts
Dr. Kersten - ICL's and the Optometric Patient
Dr. Kao - Cataracts and Beyond: What You Need to Know AboutIOLs, Intacs and RLEs
Dr. Weissman - Corneal Infiltrates, the Soldiers in the Eye

Sponsored and Administered by: The Department of Continuing Education
Southern California College of Optometry

Total Continuing Education Credits Earned: **7**

Susan Atkinson
Director, Department of Continuing Education
Southern California College of Optometry

Pennsylvania College of Optometry

at Salus University

IRVING BENNETT BUSINESS & PRACTICE MANAGEMENT CENTER
8360 OLD YORK ROAD • ELKINS PARK, PA 19027 • (215) 780-1235

Larry Thornton, OD
4074 Leimert Blvd.
Los Angeles, CA 90008

To be completed by O.D.

O.D. License Number: _____

If required by your appropriate State Agency, please fill out before mailing this certified form to your State to earn your CE credits. Feel free to make a copy for your records.

NOTE TO AGENCIES REQUIRING CERTIFICATION
THIS FORM IS NOT VALID UNLESS EMBOSSED OR STAMPED WITH THE OFFICIAL SEAL OF THE PENNSYLVANIA COLLEGE OF OPTOMETRY

To be completed by Bennett Center

This is to certify that the above-named individual has attained **One (1)** clock hour of Continuing Education Course Work offered by the Center through the correspondence course in Optometric Management magazine.

Course Title: **" Successful Management of Complicated Glaucoma Cases" (COPE #24760-GL)**
By G. Richard Bennett, MS, OD, FAAO

OPTOMETRIC Management

DATE: **April 2009**
Test Graded: July 28, 2009

PENNSYLVANIA COLLEGE OF OPTOMETRY
C.E.P.C.O.
PHILADELPHIA, PA

SOUTHERN CALIFORNIA COLLEGE OF OPTOMETRY

Office of Continuing Education
2575 Yorba Linda Boulevard • Fullerton, CA 92831-1699
714/449-7442 • Fax 714/992-7809 • email: satkinson@scco.edu

Larry Thornton, OD
8920 Pico Blvd
Los Angeles CA 90035

CERTIFICATION OF CONTINUING EDUCATION CREDIT

This will certify that: Larry Thornton, OD

OPT. LICENSE NO: 6369

Attended: **Ocular Disease, Part 1**

Instructor(s): **Drs. of Optometry:** S. Ferrucci, D. Sendrowski, M. Sawamura, J. Tong, R. Kammer, P. Kwok., and A. Pilon, with John Maher, M.D., Lesley L. Walls, O.D., M.D., Mark Sherman, M.D. and Bruce Onofrey, OD., R.Ph.
Saturday - Sunday, March 4 & 5, 2006
Southern California College of Optometry
Fullerton, California
Course No: COE 1831

Sponsored and Administered by:
The Department of Continuing Education
Southern California College of Optometry

Total Continuing Education Credits Earned:

6

Susan Atkinson
Director, Department of Continuing Education
Southern California College of Optometry

For those who are TPA certified optometrists, this program provides 17 hours in the diagnosis, treatment and management of ocular disease, as per AB 2464 effective January 1, 2005

Pennsylvania College of Optometry

at Salus University

IRVING BENNETT BUSINESS & PRACTICE MANAGEMENT CENTER
8360 OLD YORK ROAD • ELKINS PARK, PA 19027 • (215) 780-1235

Larry Thornton, OD
4074 Leimert Blvd.
Los Angeles, CA 90008

To be completed by O.D.

O.D. License Number: _____

If required by your appropriate State Agency, please fill out before mailing this certified form to your State to earn your CE credits. Feel free to make a copy for your records.

NOTE TO AGENCIES REQUIRING CERTIFICATION
THIS FORM IS NOT VALID UNLESS EMBOSSED OR STAMPED WITH THE OFFICIAL SEAL OF THE PENNSYLVANIA COLLEGE OF OPTOMETRY

To be completed by Bennett Center

This is to certify that the above-named individual has attained **One (1)** clock hour of Continuing Education Course Work offered by the Center through the correspondence course in Optometric Management magazine.

Course Title: **"Concurrent Treatment for Glaucoma and Ocular Surface Disease"**
(COPE #23776-AS)
By Robert Wooldridge, OD, FAAO

OPTOMETRIC Management

PENNSYLVANIA COLLEGE OF OPTOMETRY
C.E.P.C.O.
PHILADELPHIA, PA.

Date: November 2008 ALCON
Test Graded: May 28, 2009

Thornton Larry OD
2146 W Sunset Blvd
Los Angeles, CA 90026

Southern California College of Optometry
2575 Yorba Linda Boulevard
Fullerton, CA 92631-1699

License#: CA6369

Report date: 06-Jan-06

COURSE	DATE	TITLE	INSTRUCTOR	HOURS	GRADE	LOCATION
		Continuing Education 2004				
COE1805	16-May-04	Residents Case Presentation Forum	Shen,Tradup,etc	4.00	P	SCCO
Graduate	HOURS					
Current Term	4.00					
Cumulative	98.00					
		Continuing Education 2005				
COE1816	07-Aug-05	SCCO at South Bay Annual Forum	Comer,Tran,Ng,e	3.00	P	Torran
Graduate	HOURS					
Current Term	3.00					
Cumulative	101.00					

END OF TRANSCRIPT

Date

Registrar

University of Alabama School of Optometry
Office of Continuing Education
1716 University Boulevard
Birmingham, AL 35294-0010
(205) 934-5701

COPE approval is granted for this course. This course is COPE-qualified for 1.00 hours of CE credit.

This course is joint-sponsored by Review of Optometry, a publication of Jobson Publishing LLC.

Course Title: Providing Optimal Optics For Your Astigmatic Cataract Patients

COPE ID: 26852-PO

Date: 08/24/2010

Score: 100%

Your Answers: **CDADDDCCBDAAAAA**

Correct Answers: CDADDDCCBD***** (* = evaluation questions)

LARRY THORNTON
4074 LEIMERT BLVD
LOS ANGELES, CA 900008
USA

Tammy P. Than

Tammy P. Than, M.S., O.D.
Director, Continuing Education
UAB School of Optometry

EW ENGLAND
OLLEGE OF
PTOMETRY
ENTER FOR
ONTINUING
DUCATION
24 Beacon Street
oston, MA 02115
ww.ne-optometry.edu

SHIPPED MAR 3 1 2005

Contact Lens Spectrum - February 2005
"Prescribing Soft Toric Contact Lenses"
Peter D. Bergenske, OD, FAAO
COPE: 13030-CL CE Credits: 2 Hours

Dear Doctor

This certifies that you have received the above continuing education credits.

Requests for additional copies of this continuing education credit slip must be in writing, and there is a $15.00 service charge per copy.

Thank you for your interest in the programs offered through the Center for Continuing Education.

Sincerely,

Clifford Scott, OD

Clifford Scott, OD, MPH
Interim Director, Continuing Education

Validation requires your signature:

EW ENGLAND
OLLEGE OF
PTOMETRY
ENTER FOR
ONTINUING
DUCATION
4 Beacon Street
ston, MA 02115
ww.ne-optometry.edu

SHIPPED DEC 0 1 2004

Contact Lens Spectium - August 2004
Preventing Contact Lens Challenges For Presbyopes
Susan Gromacki, OD, MS, FAAO
COPE: 12009-CL CE Credits: 2 Hours

Dear Doctor

This certifies that you have received the above continuing education credits.

Requests for additional copies of this continuing education credit slip must be in writing, and there is a $15.00 service charge per copy.

Thank you for your interest in the programs offered through the Center for Continuing Education.

Sincerely,

Clifford Scott, OD

Clifford Scott, OD, MPH
Interim Director, Continuing Education

Validation requires your signature:

AW ENGLAND
OLLEGE OF
TOMETRY
NTER FOR
NTINUING
UCATION
Beacon Street
ston, MA 02115

Contact Lens Spectrum May 2008
Imaging and Instrumentation in Contact Lens Practice
David Berntsen, OD, MS, FAAO
COPE # 21936-CL 2 credit hours

SENT
OCT 27 2008

Dear Doctor

This certifies that you have received the above continuing education credits.

Requests for additional copies of this continuing education credit slip must be in writing, and there is a $15.00 service charge per copy.

Thank you for your interest in the programs offered through the Center for Continuing Education.

Sincerely,

Clifford Scott, OD

EW ENGLAND
OLLEGE OF
PTOMETRY
NTER FOR
NTINUING
UCATION
4 Beacon Street
ston, MA 02115
ww.neco.edu

SENT
APR 06 2009

Contact Lens Spectrum August 2008
Educating Patients About Ultraviolet Radiation
Dr. Stephen Cohen
COPE # 22751-GO 2 Credit Hours

Dear Doctor

This certifies that you have received the above continuing education credits.

Requests for additional copies of this continuing education credit slip must be in writing, and there is a $15.00 service charge per copy.

Thank you for your interest in the programs offered through the Center for Continuing Education.

Sincerely,

Alan L. Lewis, O.D., Ph.D.
Director, Continuing Education

Validation requires
your signature:_____

EW ENGLAND
OLLEGE OF
PTOMETRY
NTER FOR
NTINUING
UCATION
4 Beacon Street
ston, MA 02115
ww.neco.edu

Optometric Management September 2008
Current Trends in Daily Disposable Contact Lenses
Dr. Carmen F. Castellano
COPE # 23117-CL 2 Credit Hours

Dear Doctor

This certifies that you have received the above continuing education credits.

Requests for additional copies of this continuing education credit slip must be in writing, and there is a $15.00 service charge per copy.

Thank you for your interest in the programs offered through the Center for Continuing Education.

Sincerely,

Alan L. Lewis, O.D., Ph.D.
Director, Continuing Education

Validation requires
your signature:_____

EW ENGLAND
OLLEGE OF
PTOMETRY
NTER FOR
NTINUING
UCATION
4 Beacon Street
ston, MA 02115
ww.ne-optometry.edu

SHIPPED JAN 20 2005

Contact Lens Spectrum - November 2004
Examining the Contact Lens Patient
Douglas Benoit, OD, FAAO
COPE: 12412-CL CE Credits: 2 Hours

Dear Doctor.

This certifies that you have received the above continuing education credits.

Requests for additional copies of this continuing education credit slip must be in writing, and there is a $15.00 service charge per copy.

Thank you for your interest in the programs offered through the Center for Continuing Education.

Sincerely,

Clifford Scott, OD, MPH

Validation requires

EW ENGLAND
OLLEGE OF
PTOMETRY
NTER FOR
ONTINUING
DUCATION

Larry Thornton
4074 Leimert Blvd
Los Angeles, CA 90008
USA

W ENGLAND
OLLEGE OF
TOMETRY
NTER FOR
NTINUING
UCATION

Dr. Larry Thornton
1555 W. Sepulveda Blvd.
Torrance, CA 90501

NEW ENGLAND
COLLEGE OF
OPTOMETRY
CENTER FOR
CONTINUING
EDUCATION

EW ENGLAND
OLLEGE OF
PTOMETRY
NTER FOR
ONTINUING
DUCATION

Larry Thorton
4074 Leimert Blvd
Los Angeles, CA 90008

EW ENGLAND
OLLEGE OF
TOMETRY
NTER FOR
NTINUING
UCATION

Dr. Larry Thornton
1555 W. Sepulveda Blvd. #R2
Torrance, CA 90501

EW ENGLAND
OLLEGE OF
TOMETRY
NTER FOR
NTINUING
UCATION

Larry Thorton
4074 Leimert Blvd
Los Angeles, CA 90008

BEFORE THE
BOARD OF OPTOMETRY
DEPARTMENT OF CONSUMER AFFAIRS
STATE OF CALIFORNIA

In the Matter of the Petition for Reinstatement Regarding: LARRY FRANKLIN THORNTON, Optometrist License No. OPT 6369, Petitioner.	OAH No. L2008080180

DECISION

A quorum of the Board of Optometry (the California Board) heard this matter on September 3, 2008, in Pomona, California. The members of the Board present were Lee A. Goldstein, O.D., President; Susy Yu, O.D., Vice President; Alex M. Arredondo, O.D.; Fred Naranjo; Richard K. Simonds, O.D.; Monica Johnson; Ken Lawenda, O.D.; Martha Burnett-Collins, O.D.; and Katrina Semmes.

Margie McGavin, the Board's Enforcement Manager, was also present during the proceedings.

Daniel Juárez, Administrative Law Judge with the Office of Administrative Hearings was present at the hearing and during the consideration of the case, in accordance with Government Code section 11517.

Larry Franklin Thornton (Petitioner) represented himself.

Char Sachson, Deputy Attorney General, represented the Attorney General of the State of California, pursuant to Government Code Section 11522.

The parties submitted the matter for decision, and the Board decided the case in executive session on September 3, 2008.

Certified to be a true and correct copy of the original on file with the Board.
Date 2/7/12

FACTUAL FINDINGS

1. On July 28, 2008, Petitioner filed the Petition for Reinstatement, his second such petition (Factual Finding 5 describes the first petition). Petitioner seeks the reinstatement of his revoked optometrist license; he contends it is appropriate to reinstate his license because he is sufficiently rehabilitated from earlier transgressions he committed in another state.

2. The California Attorney General contends the public would be unsafe if the Board were to reinstate Petitioner's license.

3. The California Board licensed Petitioner (optometrist license number OPT 6369) on October 3, 1977. At the time of his original licensure by the California Board, Petitioner already possessed an optometrist license, issued by the Kentucky Board of Optometric Examiners (the Kentucky Board), in February 1977.

4(a). On or about January 15, 2003, the California Board's then-Executive Officer filed an Accusation against Petitioner, alleging cause to revoke or otherwise discipline Petitioner's California optometrist license (*In the Matter of the Accusation Against Larry Franklin Thornton, O.D.*, case number CC 2001 142). The Complainant in that case alleged that Petitioner was subject to disciplinary action because, in March 2000, the Kentucky Board had suspended Petitioner's Kentucky optometrist license for six years.[1] The Kentucky Board took disciplinary action against Petitioner because it concluded that Petitioner had violated Kentucky statutes and administrative regulations, committing the following acts: "grossly unprofessional or dishonorable conduct;" "obtaining fees by fraud or misrepresentation;" "conduct likely to deceive or defraud the public;" receipt of fees for services not rendered;" "knowingly making a false statement regarding a prescription;" "presenting a prescription for a controlled substance in violation of the law;" "failing to give visual care to patients who sought care, paid for that care, and had every expectation of receiving that care;" and "associated or shared an office or fees with a person engaged in the unauthorized practice of optometry."

4(b). The Kentucky Board's findings were generally described in the underlying (California) Accusation as follows:

> [Petitioner's] clients came to him expecting to receive professional and fair treatment with resulting proper vision care. Instead [Petitioner] took their money and did nothing to improve or care for their vision . . . The failure to provide paid-for services deceived the public who expected eyeglasses or contacts in exchange for the money they paid, and damaged the profession by smudging its reputation for honest service. [Petitioner] took the money from

[1] Despite the six-year suspension ending in March 2006, Petitioner still does not have his Kentucky optometrist license reinstated; he believes he will be eligible for reinstatement in that state sometime in 2009.

too many patients without providing glasses or contacts for his malfeasance to be a mistake, negligence, or oversight. Further he has put himself outside the reach of these patients who have no means of being reimbursed. [¶] [¶] . . . [Petitioner] simply abandoned those patients who depended upon him.

4(c). Based on the Kentucky Board's conclusions and ultimate suspension, the Complainant in the California Board's underlying Accusation cited Business and Professions Code sections 3090, subdivision (b) and 141, subdivision (a) (unprofessional conduct and disciplinary action by another state) as the bases to discipline Petitioner's California optometrist license.

4(d). Petitioner failed to file a notice of defense within 15 days after service of the Accusation, and thus waived his right to a hearing on the merits. The Board issued a Default Decision and Order, effective July 14, 2003, revoking Petitioner's optometrist license.

5. On October 12, 2006, Petitioner filed an earlier Petition for Reinstatement (*In the Matter of the Petition for the Reinstatement of the Revoked License of Larry Franklin Thornton*, case number CC 2005 117). On November 16, 2006, a quorum of the Board convened to hear Petitioner's case. The Deputy Attorney General in the instant matter represented the Office of the Attorney General in the first petition for reinstatement. Neither Petitioner nor anyone representing Petitioner appeared at the hearing. Nevertheless, the Board heard the matter and denied the petition. Among other things, the Board noted a significant inconsistency in Petitioner's assertions. The Board cited Petitioner's denial of any drug or alcohol problems, on the one hand, but noted Petitioner's reference to having taken steps toward drug and alcohol rehabilitation, on the other hand. Additionally, the Board found that, in September 2006, Petitioner had been cited for practicing optometry without a license.

6. At the instant hearing, in response to a direct question from the Board, Petitioner asserted he did not have a drug or alcohol addiction or problem. However, as part of the Petition for Reinstatement, Petitioner submitted an informational document regarding the Crenshaw Christian Center Alcohol and Drug Abuse Program. He initially told the Board that he attended the program solely to attend a bible study component that is offered as a part of the rehabilitation program. However, upon further questioning by the Board, Petitioner admitted that he attends and intends on continuing to participate in the drug rehabilitation program and that he has taken drugs before.

7. In his Petition for Reinstatement, Petitioner described his optometric work as consisting of a solo practice from March 2001 to April 2002, and a group practice between June 2003 and approximately April 2004. He also admitted that since losing his license, he practiced optometry without a license for approximately one year (though the evidence did not conclusively establish the time period in which this occurred). In his Petition documents, he wrote, "[s]ince my license has been revoked, I worked at an optometry office at 8920 West Pico Boulevard, Los Angeles.

However, I was cited for practicing without a license." He acknowledged that his actions were contrary to the laws governing the practice of optometry.

8. Currently, according to Petitioner, he receives public assistance (welfare) in the form of subsistence level monthly monetary payments through the County General Relief program. He provided no evidence to support that assertion. Petitioner also claimed to be current in continuing education course requirements, but provided no evidence to support that assertion.

9. Petitioner completed 22 hours of community service time, working for the Salvation Army, between August 2007 and June 2008. He provided no evidence explaining any imposed community service requirement.

LEGAL CONCLUSIONS

1. Cause exists to deny Petitioner's Petition for Reinstatement, pursuant to Business and Professions Code section 11522, as set forth in Factual Findings 1-9, and Legal Conclusions 2-6.

2. Petitioner bears the burden to prove, by clear and convincing evidence to a reasonable certainty, that the Board should grant his petition for reinstatement. (*Flanzer v. Board of Dental Examiners* (1990) 220 Cal.App.3d 1392, 1398; *Housman v. Board of Medical Examiners* (1948) 84 Cal.App.2d 308, 315-316.)

3. Government Code section 11522 states in pertinent part:

> A person whose license has been revoked or suspended may petition the agency for reinstatement . . . after a period of not less than one year has elapsed from the effective date of the decision or from the date of the denial of a similar petition. The agency shall give notice to the Attorney General of the filing of the petition and the Attorney General and the petitioner shall be afforded an opportunity to present either oral or written argument before the agency itself. The agency itself shall decide the petition, and the decision shall include the reasons therefor, and any terms and conditions that the agency reasonably deems appropriate to impose as a condition of reinstatement.

4. California Code of Regulations, title 16, section 1516, states in pertinent part:

[¶] . . . [¶]

(b) When considering the suspension or revocation of a certificate of registration on the grounds that the registrant has been convicted of a crime, the Board, in evaluating the rehabilitation of such person and his/her present eligibility for a license, will consider the following criteria:

(1) Nature and severity of the act(s) or offense(s).

(2) Total criminal record.

(3) The time that has elapsed since commission of the act(s) or offense(s).

(4) Whether the licensee has complied with any terms of parole, probation, restitution or any other sanctions lawfully imposed against the licensee.

(5) If applicable, evidence of expungement proceedings pursuant to Section 1203.4 of the Penal Code.

(6) Evidence, if any, of rehabilitation submitted by the licensee.

(c) When considering a petition for reinstatement of a certificate of registration under Section 11522 of the Government Code, the Board shall evaluate evidence of rehabilitation submitted by the petitioner, considering those criteria of rehabilitation specified in subsection (b).

5. Petitioner did not prove, by clear and convincing evidence to a reasonable certainty, that reinstatement of his license is warranted. Petitioner provided little, if any, evidence of rehabilitation. He failed to express genuine remorse for his earlier transgressions, transgressions that were serious in nature. Saliently, he was not forthright with the Board, first asserting no problems with drugs, then admitting to using drugs and participating in a rehabilitation program. Significantly, Petitioner provided similarly contradictory evidence at the last petition for reinstatement. (See Factual Finding 5.) This, together with his admitted unlicensed practice of optometry provided evidence of dishonesty and unprofessional behavior. There was no evidence establishing Petitioner's honesty or integrity, nor was there evidence of any effort by Petitioner to repair his tarnished professional reputation. Petitioner's overall fitness to practice optometry remains questionable; thus, the public's safety cannot be assured if the Board were to reinstate him.

6. In the future, if Petitioner chooses to seek reinstatement, the Board would likely require two psychological evaluations of Petitioner (by psychologists chosen by the Board), the completion of 100 hours of continuing education (completed within the last two years prior to a new petition), on-going drug testing, and the completion of an ethics course. Furthermore, to consider possible reinstatement in the future, the Board would expect to see no additional instances evidencing Petitioner's dishonesty, any violations of law, or a lack of professional judgment and discretion.

ORDER

Larry Franklin Thornton's Petition for Reinstatement of his optometrist license, number 6369, is denied.

Dated: 10/10/2008

Lee A. Goldstein, O.D., President
California Board of Optometry

BEFORE THE
BOARD OF OPTOMETRY
DEPARTMENT OF CONSUMER AFFAIRS
STATE OF CALIFORNIA

In the Matter of the Petition for the Reinstatement of the Revoked License of: LARRY FRANKLIN THORNTON, O.D. 4074 Leimert Blvd. Los Angeles, CA 90008 Respondent.	Case No. CC 2005 117 OAH No. L2006100659

DECISION

The attached Proposed Decision of the Administrative Law Judge is hereby adopted by the Board of Optometry as its Decision in the above-entitled matter.

This Decision shall become effective February 17, 2007.

It is so ORDERED January 17, 2007.

LEE GOLDSTEIN, O.D.
PRESIDENT
BOARD OF OPTOMETRY

BEFORE THE
BOARD OF OPTOMETRY
DEPARTMENT OF CONSUMER AFFAIRS
STATE OF CALIFORNIA

In the Matter of the Petition for the Reinstatement of the Revoked License of: LARRY FRANKLIN THORNTON, Petitioner.	Case No. CC 2005 117 OAH No. L2006100659

DECISION

On November 16, 2006, in San Diego, California, a quorum of the California Board of Optometry, Department of Consumer Affairs, State of California heard and decided the Petition for Reinstatement of the Revoked License of Larry Franklin Thornton.

Present at the hearing were Board President Lee Goldstein, O.D., Board Vice President Susy Yu, O.D., and Board Members Monica Johnson, Daniel Pollack, O.D., Mary Rosas, Richard Simonds, O.D., and Roberto Vallenowith.

Administrative Law Judge Donald P. Cole, Office of Administrative Hearings, State of California, conducted the administrative proceeding.

Deputy Attorney General Char Sachson appeared on behalf of the Office of the Attorney General, State of California.

Neither petitioner nor any individual representing petitioner appeared at the hearing.

Following the receipt into evidence of the petition for reinstatement and supporting documentation, the matter was submitted and decided by the Board in Executive Session.

FACTUAL FINDINGS

1. On or about October 3, 1977, the Board of Optometry issued Optometry License No. OPT 6369 to petitioner Larry Franklin Thornton. The license was in full force

and effect as of December 31, 2002, and was then due to expire on June 30, 2003, unless renewed.

2. On December 31, 2002, the accusation in Board Case No. CC 2001 142 was filed against petitioner. The accusation alleged unprofessional conduct, in connection with discipline that had been imposed by the Kentucky Board of Optometric Examiners in March 2000 against petitioner's Kentucky optometrist's license, based on the Kentucky Board's findings that respondent took money from clients "and did nothing to improve or care for their vision," and that his "failure to provide paid-for services . . . handicapped the clients in the conduct of their daily activities, deceived the public who expected eyeglasses or contacts in exchange for the money they paid, and damaged the profession by smudging its reputation for honest service. [Petitioner] took the money from too many patients without providing glasses or contacts for his malfeasance to be a mistake, negligence, or oversight. Further he has put himself outside the reach of these patients who have no means of being reimbursed. . . . [Petitioner] simply abandoned those patients who depended upon him."

3. Petitioner did not file a notice of defense within 15 days after service on him of the accusation. Accordingly, on June 14, 2003, the Board issued a default decision and order, which became effective July 14, 2003, in which, pursuant to Government Code section 11520, the Board found petitioner in default, deemed petitioner's default to constitute express admissions of the accusation's allegations, and revoked petitioner's license.

4. On October 12, 2006, petitioner filed with the Board under penalty of perjury a Petition for Reinstatement.

5. In the petition, petitioner responded to a number of questions that appeared on the petition form. Question 9 asked, "Are you or have you ever been under observation or treatment for mental disorders, alcoholism or narcotic addiction?" Petitioner answered "no" to this question.

6. Petitioner submitted a one-page handwritten statement dated September 9, 2006, in support of the petition, in which he wrote that he had maintained professional skills and knowledge through continuing education, that he was "working within an optical establishment, if 'off limits' is understood," that beginning later that month, he planned to attend and complete a 40-hour Red Cross blood donor program and 20 hours of "alcohol and drug rehabilitative efforts," and that "unfortunately the petitioner did not comply with all law and regulations and was cited in September 2006 for filling in for an ill 80-year-old optometrist," who "returned the following week after I was cited."

7. The petition was accompanied by: an American Red Cross certificate, which stated that petitioner had completed the requirements of adult, infant and child CPR training on August 11, 2005; three reference letters (two from professional colleagues), recommending that petitioner's license be reinstated; continuing education course certificates and related documentation issued to petitioner by the Pennsylvania College of Optometry, the New England College of Optometry, the Southern California College of Optometry

reflecting course work undertaken between February 2004 and August 2005; and a criminal action report reflecting that petitioner received a citation on September 22, 2006 for the unlicensed practice of optometry.

LEGAL CONCLUSIONS

1. In a proceeding to restore a revoked license, the burden rests on the petitioner to prove that he has rehabilitated himself and that he is entitled to have his license restored. (*Flanzer v. Board of Dental Examiners* (1990) 220 Cal.App.3d 1392, 1398.)

An individual seeking reinstatement must present strong proof of rehabilitation which must be sufficient to overcome the former adverse determination. The standard of proof is clear and convincing evidence. (*Housman v. Board of Medical Examiners* (1948) 84 Cal.App.2d 308, 315-316.)

2. Government Code section 11520 provides in pertinent part:

"A person whose license has been revoked or suspended may petition the agency for reinstatement or reduction of penalty after a period of not less than one year has elapsed from the effective date of the decision or from the date of the denial of a similar petition. The agency shall give notice to the Attorney General of the filing of the petition and the Attorney General and the petitioner shall be afforded an opportunity to present either oral or written argument before the agency itself. The agency itself shall decide the petition, and the decision shall include the reasons therefor, and any terms and conditions that the agency reasonably deems appropriate to impose as a condition of reinstatement. This section shall not apply if the statutes dealing with the particular agency contain different provisions for reinstatement or reduction of penalty."

3. California Code of Regulations, title 16, section 1516 provides in pertinent part:

"(b) When considering the suspension or revocation of a certificate of registration on the grounds that the registrant has been convicted of a crime, the Board, in evaluating the rehabilitation of such person and his/her present eligibility for a license, will consider the following criteria:

(1) Nature and severity of the act(s) or offense(s).

(2) Total criminal record.

(3) The time that has elapsed since commission of the act(s) or offense(s).

(4) Whether the licensee has complied with any terms of parole, probation, restitution or any other sanctions lawfully imposed against the licensee.

(5) If applicable, evidence of expungement proceedings pursuant to Section 1203.4 of the Penal Code.

(6) Evidence, if any, of rehabilitation submitted by the licensee.

(c) When considering a petition for reinstatement of a certificate of registration under Section 11522 of the Government Code, the Board shall evaluate evidence of rehabilitation submitted by the petitioner, considering those criteria of rehabilitation specified in subsection (b)."

4. There are "[t]wo purposes for the Legislature mandating a statement of reasons for the decision of an agency proceeding under section 11522 . . . . *First*, a statement of reasons enables a reviewing court to determine *why* [it] did what it did and, in that light, examine the administrative record to ascertain whether there is substantial evidence to support the decision. *Second*, a statement of reasons advises the rejected petitioner for reinstatement what his deficiencies are and, therefore, tells him what he should do to make a subsequent petition meritorious." (*Crandell v. Fox* (1978) 86 Cal.App.3d 760, 765.)

5. Based on Factual Findings 1 through 7 and Legal Conclusions 1 through 4, cause was not established under the applicable burden and standard of proof to grant the petition to reinstate petitioner's license. In particular, petitioner's response to question nine of the petition that he had not been under observation or treatment for mental disorders, alcoholism, or narcotic addiction seemed inconsistent with the reference in his handwritten statement to drug and alcohol rehabilitative efforts. Further, petitioner was cited on September 22, 2006, for practicing without a license. Petitioner in fact admitted, in an apparent reference to this citation, that he "did not comply with all law and regulations." It is noted as well that petitioner's handwritten statement appears to end with a subheading (E)(1), which raises a question as to whether there were other matters that were intended to be part of the statement, but which for some reason were not submitted to the Board. Ultimately, the petition raises important questions as to petitioner's suitability for reinstatement. Yet, since petitioner neither appeared at the hearing nor notified the Board as to the reason for his non-appearance, these questions cannot be answered. In light of these factors, the letters of reference submitted in petitioner's behalf and the other documents submitted with the petition were insufficient to meet petitioner's burden of proof by clear and convincing evidence that his license should be reinstated.

ORDER

Petitioner Larry Franklin Thornton's Petition for Reinstatement of Revoked Optometry License No. OPT 6369 is denied.

Dated: January 17, 2007

LEE GOLDSTEIN, O.D., President
California Board of Optometry
Department of Consumer Affairs
State of California

BILL LOCKYER, Attorney General
of the State of California
DESIREE A. PHILLIPS, State Bar No. 157464
Deputy Attorney General
California Department of Justice
300 So. Spring Street, Suite 1702
Los Angeles, CA 90013
Telephone: (213) 897-2578
Facsimile: (213) 897-2804

Attorneys for Complainant

BEFORE THE
BOARD OF OPTOMETRY
DEPARTMENT OF CONSUMER AFFAIRS
STATE OF CALIFORNIA

In the Matter of the Accusation Against:	Case No. CC 2001 142
LARRY FRANKLIN THORNTON, O.D. 2146 W. Sunset Boulevard Los Angeles, California 90026 Optometrist License Number OPT 639 Respondent.	**DEFAULT DECISION AND ORDER** [Gov. Code, §11520]

FINDINGS OF FACT

1. On or about January 15, 2003, Complainant Lucinda Ehnes, in her official capacity as the Interim Executive Officer of the Board of Optometry, Department of Consumer Affairs, filed Accusation No. CC 2001 142 against Larry Franklin Thornton (Respondent) before the Board of Optometry.

2. On or about October 3, 1977, the Board of Optometry (Board) issued Optometrist License Number OPT 6369 to Respondent. The license was in full force and effect at all times relevant to the charges herein, and will expire on June 30, 2003, unless renewed.

3. On or about January 15, 2003, an employee of the Department of Justice, served by Certified and First Class Mail a copy of the Accusation No. CC 2001 142, Statement to Respondent, Notice of Defense, Request for Discovery, and Government Code sections 11507.5, 11507.6, and 11507.7 to Respondent's address of record with the Board, which was and is 2146 W. Sunset Boulevard, Los Angeles, California 90026. A copy of the Accusation, the

related documents, and Declaration of Service are attached as Exhibit "A", and are incorporated herein by reference.

3. Service of the Accusation was effective as a matter of law under the provisions of Government Code section 11505, subdivision (c).

4. On or about February 2003, the aforementioned certified mailing documents were returned by the U.S. Postal Service marked "Undeliverable as Addressed. Forwarding Order Expired." A copy of the postal returned documents is attached hereto as exhibit B, and are incorporated herein by reference.

5. Government Code section 11506 states, in pertinent part:

"(c) The respondent shall be entitled to a hearing on the merits if the respondent files a notice of defense, and the notice shall be deemed a specific denial of all parts of the accusation not expressly admitted. Failure to file a notice of defense shall constitute a waiver of respondent's right to a hearing, but the agency in its discretion may nevertheless grant a hearing."

6. Respondent failed to file a Notice of Defense within 15 days after service upon him of the Accusation, and therefore waived his right to a hearing on the merits of Accusation No. CC 2001 142.

7. California Government Code section 11520 states, in pertinent part:

"(a) If the respondent either fails to file a notice of defense or to appear at the hearing, the agency may take action based upon the respondent's express admissions or upon other evidence and affidavits may be used as evidence without any notice to respondent."

8. Pursuant to its authority under Government Code section 11520, the Board finds Respondent is in default. The Board will take action without further hearing and, based on Respondent's express admissions by way of default and the evidence before it, contained in exhibits A and B finds that the allegations in Accusation No. CC 2001 142 are true.

9. The total costs for investigation and enforcement are $2,653.75 as of March 26, 2003.

///

DETERMINATION OF ISSUES

1. Based on the foregoing findings of fact, Respondent Larry Franklin Thornton has subjected his Optometrist License Number OPT 6369 to discipline.

2. A copy of the Accusation and the related documents and Declaration of Service are attached.

3. The agency has jurisdiction to adjudicate this case by default.

4. The Board of Optometry is authorized to revoke Respondent's Optometrist License Number OPT 6369 based upon the following violations alleged in the Accusation:

a. Business and Professions Code sections 3090(b) and 141(a): Unprofessional conduct - disciplinary action by another state.

ORDER

IT IS SO ORDERED that Optometrist License Number OPT 6369, heretofore issued to Respondent Larry Franklin Thornton, is revoked.

Pursuant to Government Code section 11520, subdivision (c), Respondent may serve a written motion requesting that the Decision be vacated and stating the grounds relied on within seven (7) days after service of the Decision on Respondent. The agency in its discretion may vacate the Decision and grant a hearing on a showing of good cause, as defined in the statute.

This Decision shall become effective on July 14, 2003.

It is so ORDERED June 14, 2003

FOR THE BOARD OF OPTOMETRY
DEPARTMENT OF CONSUMER AFFAIRS

Attachments:

Exhibit A: Accusation No.CC 2001 142; Related Documents, and Declaration of Service
Exhibit B: Postal Return Documents

BILL LOCKYER, Attorney General
of the State of California
ANNE HUNTER, State Bar No. 136982
Deputy Attorney General
California Department of Justice
300 So. Spring Street, Suite 1702
Los Angeles, CA 90013
Telephone: (213) 897-2114
Facsimile: (213) 897-2804

Attorneys for Complainant

BEFORE THE
BOARD OF OPTOMETRY
DEPARTMENT OF CONSUMER AFFAIRS
STATE OF CALIFORNIA

In the Matter of the Accusation Against: **LARRY FRANKLIN THORNTON, O.D.** 2146 W. Sunset Boulevard Los Angeles, California 90026 Optometrist License No. OPT 6369 Respondent.	Case No. CC 2001 142 **ACCUSATION**

Complainant alleges:

PARTIES

1. Karen L. Ollinger (Complainant) brings this Accusation solely in her official capacity as the Executive Officer of the Board of Optometry, Department of Consumer Affairs.

2. On or about October 3, 1977, the Board of Optometry issued Optometrist License No. OPT 6369 to Larry Franklin Thornton, O.D. (Respondent). The Optometrist License was in full force and effect at all times relevant to the charges brought herein and will expire on June 30, 2003, unless renewed.

///

///

///

JURISDICTION

3. This Accusation is brought before the Board of Optometry (Board), under the authority of the following sections of the Business and Professions Code (Code).

4. Section 3090 of the Code states:

The certificate of registration of any person registered under this chapter, or any former act relating to the practice of optometry, may be revoked or suspended for a fixed period by the board for any of the following:

. . . .

"(b) Unprofessional conduct."

5. Section 141(a) of the Code states:

"(a) For any licensee holding a license issued by a board under the jurisdiction of the department, a disciplinary action taken by another state, by any agency of the federal government, or by another country for any act substantially related to the practice regulated by the California license, may be a ground for disciplinary action by the respective state licensing board. A certified copy of the record of the disciplinary action taken against the licensee by another state, an agency of the federal government, or another country shall be conclusive evidence of the events related therein."

6. Section 118(b) of the Code provides that the suspension, expiration, surrender, or cancellation of a license shall not deprive the Board of jurisdiction to proceed with a disciplinary action during the period within which the license may be renewed, restored, reissued or reinstated.

7. Section 125.3 of the Code provides, in pertinent part, that the Board may request the administrative law judge to direct a licentiate found to have committed a violation or violations of the licensing act to pay a sum not to exceed the reasonable costs of the investigation and enforcement of the case.

///

///

///

FIRST CAUSE FOR DISCIPLINE

(Unprofessional Conduct - Disciplinary Action by Another State)

8. Respondent is subject to disciplinary action under Code sections 3090(b) and 141(a) of the Code, on the grounds of unprofessional conduct, in that Respondent's Kentucky optometrist's license was disciplined by the Kentucky Board of Optometric Examiners (hereinafter "Kentucky Board"). On March 21, 2000, the Kentucky Board, in a case entitled, "Kentucky Board of Optometric Examiners v. Larry Thornton," Administrative Action No. 99-KBOE-0672, in its Findings of Fact, Conclusions of Law, Final Order, and Notice of Appeal Rights (hereinafter "Kentucky Findings of Fact"), suspended Respondent's Kentucky optometry license for six years (until March 21, 2006). The Kentucky Board found Respondent to be in violation of the following Kentucky Revised Statutes ("KRS") and Kentucky Administrative Regulation ("KAR"):

a. KRS 320.310(1)(f) (grossly unprofessional or dishonorable conduct);

b. KRS 320.310(1)(g) (obtaining fees by fraud or misrepresentation);

c. KRS 320.310(1)(n) (conduct likely to deceive or defraud the public);

d. KRS 320.310(1)(r) (receipt of fees for services not rendered);

e. KRS 218A.140 (1)(d) (knowingly making a false statement regarding a prescription);

f. KRS 218A.140(f) (presenting a prescription for a controlled substance in violation of the law);

g. 201 KAR 5:040, Section 5 (failing to give visual care to patients who sought care, paid for that care, and had every expectation of receiving that care); and

h. 201 KAR 5:040, Section 3(2) (associated or shared an office or fees with a person engaged in the unauthorized practice of optometry).

///

///

///

///

The Kentucky Board made the following findings in support of the discipline:

> "Thornton's clients came to him expecting to receive professional and fair treatment with resulting proper vision care. Instead Thornton took their money and did nothing to improve or care for their vision. . . . The failure to provide paid-for services . . . handicapped the clients in the conduct of their daily activities, deceived the public who expected eyeglasses or contacts in exchange for the money they paid, and damaged the profession by smudging its reputation for honest service. Thornton took the money from too many patients without providing glasses or contacts for his malfeasance to be a mistake, negligence, or oversight. Further he has put himself outside the reach of these patients who have no means of being reimbursed. [¶] [¶] . . . Thornton simply abandoned those patients who depended upon him." (Kentucky Findings of Fact, p. 9.)

A copy of the Kentucky Board's Findings of Fact, Conclusions of Law, Final Order, and Notice of Appeal Rights is attached to this Accusation as exhibit A, and is incorporated herein by reference.

PRAYER

WHEREFORE, Complainant requests that a hearing be held on the matters herein alleged, and that following the hearing, the Board of Optometry issue a decision:

1. Revoking or suspending Optometrist License No. OPT 6369, issued to Larry Franklin Thornton, O.D.;

2. Ordering Larry Franklin Thornton, O.D. to pay the Board of Optometry the reasonable costs of the investigation and enforcement of this case, pursuant to Business and Professions Code section 125.3;

3. Taking such other and further action as deemed necessary and proper.

DATED: December 31, 2002

KAREN L. OLLINGER
Executive Officer
Board of Optometry
Department of Consumer Affairs
State of California
Complainant

03581110-LA2002AD1481

CALIFORNIA STATE BOARD OF
OPTOMETRY

STATE BOARD OF OPTOMETRY
2450 DEL PASO ROAD, SUITE 105, SACRAMENTO, CA 95834
P (916) 575-7170 F (916) 575-7292 www.optometry.ca.gov

§ 1516. Criteria for Rehabilitation.

(a) When considering the denial of a certificate of registration under Section 480 of the Code, the Board, in evaluating the rehabilitation of the applicant and his/her present eligibility for a certificate of registration, will consider the following criteria:

(1) The nature and severity of the act(s) or crime(s) under consideration as grounds for denial.

(2) Evidence of any act(s) committed subsequent to the act(s) or crime(s) under consideration as grounds for denial which also could be considered as grounds for denial under Section 480 of the Code.

(3) The time that has elapsed since commission of the act(s) or crime(s) referred to in subdivision (1) or (2).

(4) The extent to which the applicant has complied with any terms of parole, probation, restitution, or any other sanctions lawfully imposed against the applicant.

(5) Evidence, if any, of rehabilitation submitted by the applicant.

(b) When considering the suspension or revocation of a certificate of registration on the grounds that the registrant has been convicted of a crime, the Board, in evaluating the rehabilitation of such person and his/her present eligibility for a license, will consider the following criteria:

(1) Nature and severity of the act(s) or offense(s).

(2) Total criminal record.

(3) The time that has elapsed since commission of the act(s) or offense(s).

(4) Whether the licensee has complied with any terms of parole, probation, restitution or any other sanctions lawfully imposed against the licensee.

(5) If applicable, evidence of expungement proceedings pursuant to Section 1203.4 of the Penal Code.

(6) Evidence, if any, of rehabilitation submitted by the licensee.

(c) When considering a petition for reinstatement of a certificate of registration under Section 11522 of the Government Code, the Board shall evaluate evidence of rehabilitation submitted by the petitioner, considering those criteria of rehabilitation specified in subsection (b).

Note: Authority cited: Sections 3023, 3023.1 and 3025, Business and Professions Code. Reference: Sections 475, 480, 481 and 482, Business and Professions Code; and Section 11522, Government Code.

Memo

2450 Del Paso Road, Suite 105
Sacramento, CA 95834
(916) 575-7170, (916) 575-7292 Fax
www.optometry.ca.gov

To: Board Members **Date:** May 18, 2012

From: Jessica Sieferman **Telephone:** (916) 575-7170

Subject: **Agenda Item 3. In the Matter of the Petition for Reduction of Penalty and Early Termination of Probation**

Dr. Phillip Joseph McEldowney, Petitioner, was issued Optometrist License Number 9742 by the Board on September 6, 1991. On November 5, 2010, the Board filed an Accusation against Petitioner charging him with violations of laws and regulations based on allegations of unprofessional conduct based in fraud and misrepresentation. In a stipulated settlement agreed to by Petitioner, on July 10, 2006, Petitioner's license was revoked, the revocation stayed and the license placed on probation for five (5) years, subject to certain terms and conditions. On May 20, 2010, the Board filed a Petition to Revoke Probation against Petitioner, charging him with violations of the terms and conditions of his probation. In a stipulated settlement agreed to by Petitioner, on February 18, 2011, Petitioner's license was revoked, the revocation stayed and the license placed on probation for five (5) years, subject to certain terms and conditions.

The Petitioner is requesting the Board to grant his Petition for Reduction of Penalty and Early Termination of Probation. He is not represented by an attorney.

Attached are the following documents submitted for the Board's consideration in the above referenced matter:

1. Petition for Reduction of Penalty and Early Termination of Probation
2. Copies of Stipulated Settlement and Disciplinary Order, Petition to Revoke Probation, Stipulated Settlement and Disciplinary Order, Accusation
3. Probation Compliance Report
4. California Codes and Regulations Section 1516 – Criteria for Rehabilitation
5. Standards for Reinstatement or Reduction of Penalty
6. Certification of Licensure

Board of Optometry
2450 Del Paso Road, Suite 105
Sacramento, CA 95834
(916) 575-7170/(866) 585-2666
www.optometry.ca.gov

PETITION FOR REDUCTION OF PENALTY OR EARLY TERMINATION OF PROBATION

No petition for reduction of penalty or early termination of probation will be entertained until one year after the effective date of the Board's disciplinary action. The decision of the petition will be made by the full Board and in accordance with the attached standards for reinstatement or reduction of penalty. Early release from probation or a modification of the terms of probation will be provided only in exceptional circumstances, such as when the Board determines that the penalty or probationary terms imposed have been excessive, considering both the violation of law charged and the supporting evidence, or when there is substantive evidence that there is no more need for the degree of probationary supervision as set forth in the original terms and conditions. As a rule, no reduction of penalty or early termination of probation will be granted unless the probationer has at all times been in compliance with the terms of probation.

PLEASE TYPE OR PRINT LEGIBLY

1. NAME (FIRST)	(MIDDLE)	(LAST)	CERTIFICATE OF REGISTRATION NO.
PHILLIP	J	MCELDOWNEY	9742
2. ADDRESS (NUMBER) (STREET)			DATE OF BIRTH
6516 E. NORTH VIEW			10-15-1964
(CITY) (STATE)	(ZIP CODE)		TELEPHONE
ANAHEIM CA	92807		(714) 401 7877

3. PHYSICAL DESCRIPTION (HEIGHT)	(WEIGHT)	(EYE COLOR)	(HAIR COLOR)
5'6"	180	BROWN	BLACK

4. EDUCATION: NAME(S) OF SCHOOL(S) OR COLLEGE(S) OF OPTOMETRY ATTENDED

NAME OF SCHOOL
PENNSYLVANIA COLLEGE OF OPTOMETRY

ADDRESS (NUMBER) (STREET)
8360 OLD YORK RD

(CITY) (STATE) (ZIP CODE)
ELKINS PARK PA 19027

5. ARE YOU CURRENTLY LICENSED IN ANY OTHER STATE? ☐ YES ☒ NO

STATE	LICENSE NO.	ISSUE DATE	EXPIRATION DATE	LICENSE STATUS

6. List locations, dates, and types of practice for 5 years prior to discipline of your California license.

LOCATION	DATE FROM	DATE TO	TYPE OF PRACTICE
LAEC 4401 S VERMONT LA CA 90037	01-1995	01-2001	OPTOMETRY

7. Are you or have you ever been addicted to the use of narcotics or alcohol? ☐YES ☒NO

8. Are you or have you ever suffered from a contagious disease? ☐YES ☒NO

9. Are you or have you ever been under observation or treatment for mental disorders, alcoholism or narcotic addiction? ☐YES ☒NO

10. Have you ever been arrested, convicted or pled no contest to a violation of any law of a foreign country, the United States, any state, or a local ordinance? you must include all convictions, including those that have been set aside under Penal Code Section 1203.4 (which includes diversion programs) ☐YES ☒NO

11. Are you now on probation or parole for any criminal or administrative violations in this state or any other state? (Attach certified copies of all disciplinary or court documents) ☐YES ☒NO

12. Have you ever had disciplinary action taken against your optometric license in this state or any other state? ☐YES ☒NO

IF YOU ANSWERED YES TO ANY OF THE ABOVE QUESTIONS, YOU MUST ATTACHMENT A STATEMENT OF EXPLANATION GIVING FULL DETAILS.

ON A SEPARATE SHEET OF PAPER PROVIDE THE FOLLOWING INFORMATION

13. List the date of disciplinary action taken against your license and explain fully the cause of the disciplinary action.

14. Explain fully why you feel your license should be restored, or the disciplinary penalty reduced.

15. Describe in detail your activities and occupation since the date of the disciplinary action; include dates, employers and locations.

16. Describe any rehabilitative or corrective measures you have taken since your license was disciplined to support your petition.

17. List all post-graduate or refresher courses, with dates, location and type of course, you have taken since your license was disciplined.

18. List all optometric literature you have studied during the last year.

19. List all continuing education courses you have completed since your license was disciplined.

20. List names, addresses and telephone numbers of persons submitting letters of recommendation accompanying this petition.

I declare under penalty of perjury under the laws of the State of California that the answers and information given by me in completing this petition, and any attachments, are true and I understand and agree that any misstatements of material facts will be cause for the rejection of this petition.

Date 04/27/2012 Signature [illegible]

All items of information requested in this petition are mandatory. Failure to provide any of the requested information will result in the petition being rejected as incomplete. The information will be used to determine qualifications for reinstatement, reduction of penalty or early termination of probation. The person responsible for information maintenance is the Executive Officer of the Board of Optometry at 2450 Del Paso Road, Suite 105, Sacramento, California, 95834. This information may be transferred to another governmental agency such as a law enforcement agency, if necessary to perform its duties. Each individual has the right to review the files or records maintained on them by our agency, unless the records are identified confidential information and exempted by Section 1798.3 of the Civil Code.

13. DECISION AND ORDER ordered on June 8. 2006 became effective on July 10, 2006. Placed on probation for five years for practicing with an "illegal" name (Dr. Bo) and with an expired license. Among the terms of probation are to submit quarterly reports, cost recovery of $8492.00, reexamination of the law portion, continuing education course in Ethics and practice by legal name.
First and only interview with probation officer Mrs. Margie McGavin on Feb. 21. 2007. Received first of three notices from Mrs. McGavin on Oct. 7, 2008 regarding noncompliance to quarterly reports. Second and last notice dated Jan 9. 2009 and May 12, 2009 regarding noncompliance with law exam and ethics course.

Received letter from Jessica Sieferman introducing herself as the "new" Probation monitor on Feb 8, 2010.

SECOND DECISION AND ORDER was on Jan 19, 2011 becoming effective Feb. 18. 2011. Placed on probation for five years for noncompliance to submit written reports, to take law portion of licensing examination, and to take Ethics course. Among the terms of probation are to submit written reports, cost recovery of $1832.50, reexamination of law portion and continuing education course in Ethics.

14. First and foremost I would like to thank the Board Of Optometry for the opportunity to be heard and for their kind guidance. I would like to start by accepting full responsibility, with no excuses, only heartfelt remorse.
I was born and raised in Saigon, Viet Nam, came to the United States in April of 1975 with the help of my G.I. uncle Harry McEldowney. After graduating from UCLA and then Pennsylvania College of Optometry in 1991 I decided to honor my father by using his last name as my middle name on my diploma which reads Phillip Bo McEldowney O.D. As seen with exhibits A, B, C, my first CV contains the name Bo, my last place of employment before private practice was at the Los Angeles Eye Center with the late Dr. Bachelis has the name Bo on the business card so it was never my intention to commit fraud especially to my patients. It just so happens that in my practice with 99% asian and English as a second language, many have difficulty pronouncing the name McEldowney! It is an honest mistake that I deeply regret... Regarding the lapse in my license the truth is I did not have the required CE credits to renew my license so I waited and waited... As seen with attached exhibit I still have evidence of the smoking gun if you will, still waiting to be mailed off and avoid all sorts of headache. Talk about a $300 mistake of renewing on time resulting into a $10342.50 migraine. Chalk that one up to lesson learned albeit costly and catastrophic.

In all honesty, the day that I received the letter from Jessica Sieferman announcing her arrival was the worst of time that became the best of time for me. She helped by setting up obstacle after obstacle which I proceed to knock down. First she sets up the payment plan for cost recovery, stress the importance of all other terms. Subsequently, all required written reports were on time, law exam was taken and passed (exhibit C), Ethics course was taken and also passed (see exhibit D). Essentially every acts of noncompliance that was not met and causing the second Decision and Order are now satisfied within a year's time!!!
After 21 years of practing Optometry with great competence (no malpractice) strong character & family man (no drug/alcohol abuse) made a mistake and paid dearly for it! If there is such a thing as a second chance, I would like this to be my mulligan. Please allow me to face my patients, my colleagues, my family and friends without the stigma and shame anymore, and where the punishment no longer fits the mistake. In the light that nothing is gained by my being on probation, I humbly request for the early termination and I guarantee that I won't let you down.

15. I only have been working for myself. Tried to pick up a few days when things are slow but have not received any positive response. Word is currently with my probation status I am untouchable therefore unhireable. Sad but true.

16. I have always loved practicing Optometry. Very good at what I do, very enthusiastic when seeing patients I have strong morals and characters. Have not always been good with the little things and little details...I am booksmart you see and sometimes I procrastinate which is a flaw I used to have, but no longer thanks to Jessica Sieferman.

17-18-19

Journal of Optometry
Review of Optometry Journal
Journal of the American Optometric Association
What is Ethics Anyway?, Josephson Institute
Ethics: A Professional Challenge Revisited, R. Hopping JAOA
Resolving Ethical Dilemmas, Bernard Lo
Ethics in the Clinical Practice of Optometry, Tony Carnevali O.D.
Geriatrics for the Practicing Optometrist, John Lee O.D., Leslie Walls O.D., M.D.
Dry Eye: Current Concepts in Dx and Tx, Jerry Paugh O.D.
Diabetic Retinopathy, Steven Furrucci O.D.
Corneal Infitrates, Barry A. Weissman, O.D.
Computer Vision Syndrome, Jeffrey Anshel O.D.
Treatment and Management Ocular Disease, David Bright O.D.
Glaucoma 16-HR Case Management Course, Drs Comer, Sawamura, Tong O.D.

19. Dr. Kenneth M. Murata, O.D. LAEC 4401 S. VERMONT LA CA 90037

EXHIBIT A

Pennsylvania College of Optometry

acting under the authority vested in it by the Commonwealth of Pennsylvania certifies that upon

Phillip Bo McEldowney

who has completed all the requirements imposed by law and by this institution there has been conferred the degree of

Doctor of Optometry

and is admitted to all the rights, privileges and immunities thereunto appertaining.

In testimony whereof, this diploma has been subscribed by the authorized officers and sealed with the seal of the college.

Given at Philadelphia, this twenty-fifth day of May, 1991.

Donald M. Geckler J.D.
Chairman, Board of Trustees

J. Donald Kratz
Secretary, Board of Trustees

1919

Thomas L. Lewis, O.D., Ph.D.
President

Anthony J. M. Hughes OD MPH
Dean

EXHIBIT B

DR. PHILLIP BO McELDOWNEY
21430 Via Pepita
Yorba Linda, CA 92686
(714) 777-4212

QUALIFICATIONS

O. D. , Bachelor of Science Degree in Optometry and Biology. Optometric experience including the diagnosis, treatment and management of anterior and posterior segment diseases. Utilizing special diagnostic procedures including culturing of ocular infections, irrigation and dilation of the lacrimal system, use of the 90D lens, gonioscopy and Humphrey automated visual fields. Completed rotations through walk-in and emergency clinics, pediatrics, contact lens and ophthalmic optics service.

EDUCATION

O. D., Pennsylvania College of Optometry, Philadelphia, PA, 1991.
B. S., University of California Los Angeles, Los Angeles, CA, 1987.

CLINICAL EXPERIENCE

Mar 91 - May 91

THE PEDIATRIC UNIT OF THE EYE INSTITUTE, PHILADELPHIA, PA.
Responsible for: Diagnosis treatment and management of refractive and binocular vision problems in children and athletics, including vision therapy and perceptual/motor evaluation and therapy.

Dec 90 - Mar 91

NELLIS AIR FORCE BASE HOSPITAL, LAS VEGAS, NV.
Responsible for: Full eye examinations with dilation at pathology site. High volume site especially geriatric population.

SEP 90 - DEC 90

DR. GABRIEL DERY, WEST HOLLYWOOD, CA.
Responsible for: Contact lens evaluations and fittings in high volume private practice which specializes in contact lens care.

MAY 89 - MAY 90

THE EYE INSTITUTE, PHILADELPHIA, PA.
Responsible for: Routine optometric examinations, including specialty services such as emergency care, contact lens and neurology rotations.

PROFESSIONAL AFFILIATE

1987 - Present American Optometric Association.
1987 - Present California Optometric Association.
1987 - Present National Optometric Student Association.

REFERENCES

Furnished Upon Request.

EXHIBIT C

Pennsylvania College of Optometry

acting under the authority vested in it by the Commonwealth of Pennsylvania certifies that upon

Phillip Bo McEldowney

who has completed all the requirements imposed by law and by this institution there has been conferred the degree of

Doctor of Optometry

and is admitted to all the rights, privileges and immunities thereunto appertaining.

In testimony whereof, this diploma has been subscribed by the authorized officers and sealed with the seal of the college.

Given at Philadelphia, this twenty-fifth day of May, 1991.

PENNSYLVANIA COLLEGE OF OPTOMETRY 1918

LOS ANGELES

EYE CENTER & CLINIC

4401 S. VERMONT AT VERNON

P. BO McELDOWNEY
OPTOMETRIST & STAFF

LOS ANGELES, CA 90037
PHONE (213) 232-1234

State of California Department of Consumer Affairs

BOARD OF OPTOMETRY
400 R STREET, SUITE 1070
SACRAMENTO, CA 95814-62
(916) 323-8720

STATE OF CALIFORNIA

REGISTERED OPTOMETRIST

With Diagnostic Pharmaceutical Agent Certification

LICENSE NO. OPT 9742 VALID UNTIL OCTOBER 31, 1999
RECEIPT NO. 00015898

In accordance with the provisions of Section 3055 of the BUSINESS AND PROFESSIONS CODE, the individual named hereon is licensed as an Optometrist, and is subject to the rules and regulations of the California State Board of Optometry.

PHILLIP MC ELDOWNEY
4401 S VERMONT
LOS ANGELES CA 90037

36/98
.8/98

----- NON-TRANSFERABLE --- POST IN PUBLIC VIEW -----

FORM WOPDPA (07/2

EXHIBIT "SMOKING GUN"

PAGE 3

08/04/03

08/04/03

Consumer Affairs

Board of Optometry

LICENSE RENEWAL APPLICATION FOR OPTOMETRIST WITH DIAGNOSTIC PHARMACEUTICAL AGENT CERTIFICATION

SSN= 586322842

DO NOT ALTER THIS STATEMENT

I CERTIFY UNDER PENALTY OF PERJURY UNDER THE LAWS OF THE STATE OF CALIFORNIA THAT I HAVE COMPLETED AND CAN DOCUMENT:

F. X THE REQUIRED HOURS OF CONTINUING EDUCATION FOR THE RENEWAL OF MY LICENSE WITHIN THE PRECEDING RENEWAL PERIOD.

G. X CURRENT CARDIOPULMONARY RESUSCITATION CERTIFICATION.

D. SIGNATURE [signature] DATE 12/10/03

LICENSE NO	LICENSE EXPIRES	AMOUNT DUE NOW
OPT 9742	10/31/03	$300.00

DELINQUENT FEE IF POSTMARKED AFTER 11/30/03 $325.00

E. COMPLETE ONLY IF A CHANGE IN NAME OR BUSINESS ADDRESS HAS OCCURRED. PRINT CORRECTION BELOW.

FULL NAME

PRACTICE LOCATION

CITY STATE ZIP

ENTER YOUR BUSINESS PHONE NUMBER FOR FUTURE REFERENCE

PHONE NUMBER (714) 401-7877

LICENSE STATUS

ACTIVE

IF YOU WISH TO CHANGE YOUR STATUS, PLEASE CHECK ONE OF THE FOLLOWING BOXES

A. ☐ ACTIVE

B. ☐ INACTIVE

PHILLIP MC ELDOWNEY
6420 E OAKVIEW LANE
ANAHEIM CA 92807

69001516201516209000097428011031030003000000032500

EXHIBIT D

STATE AND CONSUMER SERVICES AGENCY EDMUND G. BROWN JR., GOVERNOR

OPTOMETRY

STATE BOARD OF OPTOMETRY
2420 DEL PASO ROAD, SUITE 255, SACRAMENTO, CA 95834
P (916) 575-7170 F (916) 575-7292 www.optometry.ca.gov

Notification of Exam Results
Certified & Regular Mail

April 19, 2011

Dr. Phillip McEldowney, O.D.
9580 Garden Grove, #104
Garden Grove, CA 92844

Case #: D1 2003-181

Dear Dr. McEldowney:

The California State Board of Optometry received the results of the California Laws and Regulations Examination you took on April 6, 2011 in Sacramento, California. You have successfully passed the examination.

Condition #9 of your Stipulated Settlement and Disciplinary Order is now fulfilled and you may return to practice. Please keep this letter for your records.

If you have any questions regarding your exam results or the conditions of your probation, please contact me at (916) 575-7184.

Sincerely,

Jessica Sieferman
Probation Monitor
Jessica.Sieferman@dca.ca.gov

EXHIBIT E

March 6, 2012

California State Board of Optometry
2420 Del Paso Road, Suite 105
Sacramento, CA 95834

Attn: Jessica Sieferman, Probation Monitor

Dear Ms. Sieferman:

This letter is to certify that Dr. McEldowney has successfully completed all requirements of the Professional Ethics Course that was approved by the State Board on February 11, 2009.

The coursework included reading assignments, ethics case study discussions with a faculty member, and the preparation of three topics related to ethics in health care (attached).

Please contact me if further information is needed.

OD, MS

Sincerely,

Morris S. Berman, O.D., M.S.
Vice President and Dean of Academic Affairs

cc: Dr. McEldowney

4244 W. 175th Place
Torrance, CA 9054

LETTER OF REC

April 30, 2012

State Board of Optometry
2450 Del Paso Road, Suite # 105
Sacramento, CA 95834

Re: Phillip McEldowney, O.D.

I have known Dr. McEldowney for 18 yrs. He is a knowledgeable and skilled clinician. As a colleague I have observed him to be affable and supportive of his patients, their needs being paramount.

Any recent transgression he may have had is an aberration and does not accurately represent him.

I hope that any sanctions that he may have incurred be terminated and he be reinstated.

Kenneth M. Murata, O.D.

BEFORE THE
STATE BOARD OF OPTOMETRY
DEPARTMENT OF CONSUMER AFFAIRS
STATE OF CALIFORNIA

In the Matter of the Petition to Revoke Probation Against: PHILLIP MCELDOWNEY 9580 Garden Grove, #105 Garden Grove, CA 92844 Certificate of Registration to Practice Optometry No. 9742 Respondent.	Case No. OPT 9742 OAH No. 2010061376

DECISION AND ORDER

The attached Stipulated Settlement and Disciplinary Order is hereby adopted by the State Board of Optometry, Department of Consumer Affairs, as its Decision in this matter.

This Decision shall become effective on February 18, 2011.

It is so ORDERED January 19, 2011.

FOR THE STATE BOARD OF OPTOMETRY
DEPARTMENT OF CONSUMER AFFAIRS

EDMUND G. BROWN JR.
Attorney General of California
JAMES LEDAKIS
Supervising Deputy Attorney General
KAREN L. GORDON
Deputy Attorney General
State Bar No. 137969
110 West "A" Street, Suite 1100
San Diego, CA 92101
P.O. Box 85266
San Diego, CA 92186-5266
Telephone: (619) 645-2073
Facsimile: (619) 645-2061
Attorneys for Complainant

BEFORE THE
STATE BOARD OF OPTOMETRY
DEPARTMENT OF CONSUMER AFFAIRS
STATE OF CALIFORNIA

In the Matter of the Petition to Revoke Probation Against: **PHILLIP MCELDOWNEY** **9580 Garden Grove, #105** **Garden Grove, CA 92844** **Certificate of Registration to Practice Optometry No. 9742** Respondent.	Case No. OPT 9742 OAH No. 2010061376 **STIPULATED SETTLEMENT AND DISCIPLINARY ORDER**

In the interest of a prompt and speedy settlement of this matter, consistent with the public interest and the responsibility of the State Board of Optometry of the Department of Consumer Affairs, the parties hereby agree to the following Stipulated Settlement and Disciplinary Order which will be submitted to the Board for approval and adoption as the final disposition of the Petition to Revoke Probation.

PARTIES

1. Mona Maggio (Complainant) is the Executive Officer of the State Board of Optometry. She brought this action solely in her official capacity and is represented in this matter by Edmund G. Brown Jr., Attorney General of the State of California, by Karen L. Gordon, Deputy Attorney General.

2. Respondent Phillip McEldowney (Respondent) is representing himself in this proceeding and has chosen not to exercise his right to be represented by counsel.

3. On or about September 6, 1991, the State Board of Optometry issued Certificate of Registration to Practice Optometry No. 9742 to Phillip McEldowney (Respondent). The Optometry License was in full force and effect at all times relevant to the charges brought in Petition to Revoke Probation No. OPT 9742 and will expire on October 31, 2011, unless renewed.

JURISDICTION

4. Petition to Revoke Probation No. OPT 9742 was filed before the State Board of Optometry (Board), Department of Consumer Affairs, and is currently pending against Respondent. The Petition to Revoke Probation and all other statutorily required documents were properly served on Respondent on June 4, 2010. Respondent timely filed his Notice of Defense contesting the Petition to Revoke Probation. A copy of Petition to Revoke Probation No. OPT 9742 is attached as Exhibit A and incorporated herein by reference.

ADVISEMENT AND WAIVERS

5. Respondent has carefully read, and understands the charges and allegations in Petition to Revoke Probation No. OPT 9742. Respondent has also carefully read, and understands the effects of this Stipulated Settlement and Disciplinary Order.

6. Respondent is fully aware of his legal rights in this matter, including the right to a hearing on the charges and allegations in the Petition to Revoke Probation; the right to be represented by counsel at his own expense; the right to confront and cross-examine the witnesses against him; the right to present evidence and to testify on his own behalf; the right to the issuance of subpoenas to compel the attendance of witnesses and the production of documents; the right to reconsideration and court review of an adverse decision; and all other rights accorded by the California Administrative Procedure Act and other applicable laws.

7. Respondent voluntarily, knowingly, and intelligently waives and gives up each and every right set forth above.

///

///

CULPABILITY

8. Respondent admits the truth of each and every charge and allegation in Petition to Revoke Probation No. OPT 9742.

9. Respondent agrees that his Optometry License is subject to discipline and he agrees to be bound by the State Board of Optometry (Board)'s probationary terms as set forth in the Disciplinary Order below.

CONTINGENCY

10. This stipulation shall be subject to approval by the State Board of Optometry. Respondent understands and agrees that counsel for Complainant and the staff of the State Board of Optometry may communicate directly with the Board regarding this stipulation and settlement, without notice to or participation by Respondent. By signing the stipulation, Respondent understands and agrees that he may not withdraw his agreement or seek to rescind the stipulation prior to the time the Board considers and acts upon it. If the Board fails to adopt this stipulation as its Decision and Order, the Stipulated Settlement and Disciplinary Order shall be of no force or effect, except for this paragraph, it shall be inadmissible in any legal action between the parties, and the Board shall not be disqualified from further action by having considered this matter.

11. The parties understand and agree that facsimile copies of this Stipulated Settlement and Disciplinary Order, including facsimile signatures thereto, shall have the same force and effect as the originals.

12. This Stipulated Settlement and Disciplinary Order is intended by the parties to be an integrated writing representing the complete, final, and exclusive embodiment of their agreement. It supersedes any and all prior or contemporaneous agreements, understandings, discussions, negotiations, and commitments (written or oral). This Stipulated Settlement and Disciplinary Order may not be altered, amended, modified, supplemented, or otherwise changed except by a writing executed by an authorized representative of each of the parties.

13. In consideration of the foregoing admissions and stipulations, the parties agree that the Board may, without further notice or formal proceeding, issue and enter the following Disciplinary Order:

DISCIPLINARY ORDER

IT IS HEREBY ORDERED that Certificate of Registration to Practice Optometry No. 9742 issued to Respondent Phillip McEldowney (Respondent) is revoked. However, the revocation is stayed and Respondent is placed on probation for five (5) years on the following terms and conditions.

SEVERABILITY CLAUSE Each condition of probation contained herein is a separate and distinct condition. If any condition of this Order, or any application thereof, is declared unenforceable in whole, in part, or to any extent, the remainder of this Order and all other applicants thereof, shall not be affected. Each condition of this Order shall separately be valid and enforceable to the fullest extent permitted by law.

1. OBEY ALL LAWS. Respondent shall obey all laws, whether federal, state, or local. The Respondent shall also obey all regulations governing the practice of optometry in California. Respondent shall notify the Board in writing within three days of any incident resulting in his arrest or charges filed against, or a citation issued against, Respondent.

2. QUARTERLY REPORTS Respondent shall file quarterly reports of compliance under penalty of perjury, on forms to be provided, to the probation monitor assigned by the Board. Omission or falsification in any manner of any information on these reports shall constitute a violation of probation and shall result in the filing of an accusation and/or a petition to revoke probation against Respondent's optometrist license. Quarterly report forms will be provided by the Board. Respondent is responsible for contacting the Board to obtain additional forms if needed. Quarterly reports are due for each year of probation and the entire length of probation as follows:

- For the period covering January 1st through March 31st, reports are to be completed and submitted between April 1st and April 7th.

- For the period covering April 1st through June 30th, reports are to be completed and submitted between July 1st and July 7th.
- For the period covering July 1st through September 30th, reports are to be completed and submitted between October 1st and October 7th.
- For the period covering October 1st through December 31st, reports are to be completed and submitted between January 1st and January 7th.

Failure to submit complete and timely reports shall constitute a violation of probation.

3. PROBATION MONITORING PROGRAM Respondent shall comply with requirements of the Board appointed probation monitoring program, and shall, upon reasonable request, report to or appear to a venue as directed.

Respondent shall claim all certified mail issued by the Board, respond to all notices of reasonable requests timely, and submit Reports, Identification Update reports or other reports similar in nature, as requested and directed by the Board or its representative.

Respondent shall provide to the Board the names, physical addresses, mailing addresses, telephone numbers, and e-mail addresses of all employers, supervisors, managers, and contractors and shall give specific, written consent that the Respondent authorizes the Board and its representatives and the employers, supervisors, managers, and contractors to communicate regarding the Respondent's work status, performance, and monitoring. Monitoring includes, but is not limited to, any violation of any probationary term and condition.

Respondent is encouraged to contact the Board's Probation Program at any time he has a question or concern regarding his terms and conditions of probation.

Failure to appear for any scheduled meeting or examination, or cooperate with the requirements of the program, including timely submission of requested information, shall constitute a violation of probation and will result in the filing of an accusation and/or a petition to revoke probation against Respondent's Optometrist license.

4. FUNCTION AS AN OPTOMETRIST Respondent shall function as an optometrist for a minimum of 24 hours per week for the entire term of his probation period.

5. NOTICE TO EMPLOYER Respondent shall provide to the board the names, physical addresses, mailing addresses, and telephone number of all employers and supervisors and shall give specific, written consent that the licensee authorizes the board and the employers and

supervisors to communicate regarding the licensee's work status, performance, and monitoring. Respondent shall be required to inform his/her employer, and each subsequent employer during the probation period, of the discipline imposed by this decision by providing his supervisor and director and all subsequent supervisors and directors with a copy of the decision and order, and the Stipulated Settlement in this matter prior to the beginning of or returning to employment or within 14 days from each change in a supervisor or director.

The employer will then inform the Board, in writing, that he is aware of the discipline, on forms to be provided to the Respondent. Respondent is responsible for contacting the Board to obtain additional forms if needed. All reports completed by the employer must be submitted from the employer directly to the Board.

6. NOTICE TO PATIENTS During the period of probation, Respondent shall post a notice in a prominent place in his office that is conspicuous and readable to the public. The notice shall state the Respondent's Optometrist license is on probation and shall contain the telephone number the State Board of Optometry. Respondent shall also post a notice containing this information prominently on any website related to his practice of Optometry. The above-described notices shall be approved by the board within 30 days of the effective date of this decision.

7. CHANGES OF EMPLOYMENT OR RESIDENCE Respondent shall notify the Board, and appointed probation monitor, in writing, of any and all changes of employment, location, and address within 14 days of such change. This includes but is not limited to applying for employment, termination or resignation from employment, change in employment status, and change in supervisors, administrators or directors.

Respondent shall also notify his probation monitor AND the Board IN WRITING of any changes of residence or mailing address within 14 days. P.O. Boxes are accepted for mailing purposes; however the Respondent must also provide his physical residence address as well.

8. COST RECOVERY Respondent shall pay to the Board a sum not to exceed the costs of the investigation and prosecution of this case. That sum shall be $ 1,832.50 and shall be paid in full directly to the Board, in a Board approved payment plan, within 6 months from the end of the Probation term. Cost recovery will not be tolled.

If Respondent is unable to submit costs timely, he shall be required instead to submit an explanation of why he is unable to submit these costs in part or in entirety, and the date(s) he will be able to submit the costs, including payment amount(s). Supporting documentation and evidence of why the Respondent is unable to make such payment(s) must accompany this submission.

Respondent understands that failure to submit costs timely is a violation of probation and submission of evidence demonstrating financial hardship does not preclude the Board from pursuing further disciplinary action. However, Respondent understands that by providing evidence and supporting documentation of financial hardship may delay further disciplinary action.

Consideration to financial hardship will not be given should Respondent violate this term and condition, unless an unexpected AND unavoidable hardship is established from the date of this order to the date payment(s) is due. The filing of bankruptcy by the Respondent shall not relieve the Respondent of his responsibility to reimburse the Board for these costs.

9. TAKE AND PASS LICENSURE EXAMINATION Respondent shall take and pass the California Laws and Regulations Examination (CLRE). Respondent shall pay the established examination fees. Respondent shall not practice until he passes this exam. If respondent has not taken and passed the examination within twelve months from the effective date of this decision, respondent shall be considered to be in violation of probation.

10. VALID LICENSE STATUS Respondent shall maintain a current, active and valid license for the length of the probation period. Failure to pay all fees and meet CE requirements prior to his license expiration date shall constitute a violation of probation.

11. TOLLING FOR OUT-OF-STATE RESIDENCE OR PRACTICE Periods of residency or practice outside California, whether the periods of residency or practice are temporary or permanent, will toll the probation period but will not toll the cost recovery requirement, nor the probation monitoring costs incurred. Travel out of California for more than 30 days must be reported to the Board in writing prior to departure. Respondent shall notify the Board, in writing, within 14 days, upon his/her return to California and prior to the commencement of any

employment where representation as an optometrist was provided.

Respondent's license shall be automatically cancelled if respondent's periods of temporary or permanent residence or practice outside California total two years. However, respondent's license shall not be cancelled as long as respondent is residing and practicing in another state of the United States and is on active probation with the licensing authority of that state, in which case the two year period shall begin on the date probation is completed or terminated in that state.

12. LICENSE SURRENDER During Respondent's term of probation, if he ceases practicing due to retirement, health reasons, or is otherwise unable to satisfy the condition of probation, Respondent may surrender his license to the Board. The Board reserves the right to evaluate Respondent's request and exercise its discretion whether to grant the request, or to take any other action deemed appropriate and reasonable under the circumstances, without further hearing. Upon formal acceptance of the tendered license and wall certificate, Respondent will no longer be subject to the conditions of probation. All costs incurred (i.e., Cost Recovery and Probation Monitoring) are due upon reinstatement.

Surrender of Respondent's license shall be considered a disciplinary action and shall become a part of Respondent's license history with the Board.

13. VIOLATION OF PROBATION If Respondent violates any term of the probation in any respect, the Board, after giving Respondent notice and the opportunity to be heard, may revoke probation and carry out the disciplinary order that was stayed. If a petition to revoke probation is filed against Respondent during probation, the Board shall have continuing jurisdiction and the period of probation shall be extended until the matter is final. No petition for modification of penalty shall be considered while there is an accusation or petition to revoke probation or other penalty pending against Respondent.

14. COMPLETION OF PROBATION Upon successful completion of probation, Respondent's license shall be fully restored.

15. DIRECT SUPERVISION During the period of probation, Respondent shall be under the direct supervision of a person holding a current and valid non-restricted Board license. "Under the direct supervision" means assigned to an optometrist who is on duty and immediately available in

the assigned patient area. The Board shall be informed in writing of and approve the level of supervision provided to the Respondent while he is functioning as a licensed optometrist. The appropriate level of supervision must be approved by the Board prior to commencement of work.

16. SUPERVISOR QUARTERLY REPORTS Supervisor Quarterly Reports of Performance are due for each year of probation and the entire length of probation from each employer, as follows:

- For the period covering January 1st through March 31st, reports are to be completed and submitted between April 1st and April 7th.
- For the period covering April 1st through June 30th, reports are to be completed and submitted between July 1st and July 7th.
- For the period covering July 1st through September 30th, reports are to be completed and submitted between October 1st and October 7th.
- For the period covering October 1st through December 31st, reports are to be completed and submitted between January 1st and January 7th.

Respondent is ultimately responsible for ensuring his supervisor submits complete and timely reports. Failure to ensure each supervisor submits complete and timely reports shall constitute a violation of probation.

17. EMPLOYMENT LIMITATIONS Respondent shall not work in any health care setting as a supervisor of optometrists. The Board may additionally restrict respondent from supervising technicians and/or unlicensed assistive personnel on a case-by-case basis.

Respondent shall not work as a faculty member in an approved school of optometry or as an instructor in a Board approved continuing education program.

Respondent shall work only on a regularly assigned, identified and predetermined worksite(s) and shall not work in a float capacity.

If the respondent is working or intends to work in excess of 40 hours per week, the Board may request documentation to determine whether there should be restrictions on the hours of work.

18. CONTINUING EDUCATION COURSE IN ETHICS Within 90 days of the effective date of the Board's Decision and Order, respondent shall submit the name of a continuing education course in ethics for prior Board approval. Said course must be taken and completed within one year from the effective date of the Board's Decision and Order.

The costs associated with the ethics course shall be paid by the respondent. Units obtained for an approved course in ethics shall not be used for continuing education units required for renewal of licensure. Respondent shall submit to the Board the original transcripts or certificates of completion for the ethics course. The Board shall return the original documents to respondent after photocopying them for its records.

19. PRACTICE BY LEGAL NAME Respondent shall use his legal name in all his professional endeavors as an optometrist, including but not limited to, any and all advertising, signage, business cards, letterhead, and name tags. He shall be known to clients and staff as Phillip McEldowney, O.D. Any use of any other name, including Dr. Bo, shall be a violation of probation.

20. HAVE NO BUSINESS RELATIONSHIP WITH A REGISTERED DISPENSING OPTICIAN Respondent shall have no membership, proprietary interest, co ownership, landlord-tenant relationship, or any profit-sharing arrangement in any form, directly or indirectly, with a registered dispensing optician.

ACCEPTANCE

I have carefully read the Stipulated Settlement and Disciplinary Order. I understand the stipulation and the effect it will have on my Optometry License. I enter into this Stipulated Settlement and Disciplinary Order voluntarily, knowingly, and intelligently, and agree to be bound by the Decision and Order of the State Board of Optometry.

DATED: 11/5/10

PHILLIP MCELDOWNEY
Respondent

ENDORSEMENT

The foregoing Stipulated Settlement and Disciplinary Order is hereby respectfully submitted for consideration by the State Board of Optometry of the Department of Consumer Affairs.

Dated: 11-8-10

Respectfully Submitted,

EDMUND G. BROWN JR.
Attorney General of California
JAMES LEDAKIS
Supervising Deputy Attorney General

Karen Gordon

KAREN L. GORDON
Deputy Attorney General
Attorneys for Complainant

SD2010800631
70366651.docx

Exhibit A

Petition to Revoke Probation No. OPT 9742

EDMUND G. BROWN JR.
Attorney General of California
LINDA K. SCHNEIDER
Supervising Deputy Attorney General
SHERRY L. LEDAKIS
Deputy Attorney General
State Bar No. 131767
110 West "A" Street, Suite 1100
San Diego, CA 92101
P.O. Box 85266
San Diego, CA 92186-5266
Telephone: (619) 645-2078
Facsimile: (619) 645-2061
Attorneys for Complainant

BEFORE THE
STATE BOARD OF OPTOMETRY
DEPARTMENT OF CONSUMER AFFAIRS
STATE OF CALIFORNIA

In the Matter of the Petition to Revoke Probation Against; **PHILLIP MCELDOWNEY** **9580 Garden Grove, #105** **Garden Grove, CA 92844** **Certificate of Registration to Practice Optometry No. 9742** Respondent.	Case No. 2003-181 **PETITION TO REVOKE PROBATION**

Complainant alleges:

1. Mona Maggio (Complainant) brings this Petition to Revoke Probation solely in her official capacity as the Executive Officer of the State Board of Optometry, Department of Consumer Affairs.

2. On or about September 6, 1991, the State Board of Optometry issued Certificate of Registration to Practice Optometry No. 9742 to Phillip McEldowney (Respondent). The Optometry License was in effect at all times relevant to the charges brought herein and will expire on October 31, 2011, unless renewed.

Prior Disciplinary Action

3. In a disciplinary action entitled *In the Matter of the Accusation Against Phillip McEldowney*, Case No. 2003 181, the State Board of Optometry, issued a decision, effective July

10, 2006, in which Respondent's Optometry License was revoked. However, the revocation was stayed and Respondent's license was placed on probation for a period of five years with certain terms and conditions. A copy of that decision is attached as Exhibit A and is incorporated by reference.

JURISDICTION

4. This Petition to Revoke Probation is brought before the State Board of Optometry (Board), Department of Consumer Affairs, under the authority of the following laws. All section references are to the Business and Professions Code unless otherwise indicated.

5. Code section 118(b) provides:

> (b) The suspension, expiration, or forfeiture by operation of law of a license issued by a board in the department, or its suspension, forfeiture, or cancellation by order of the board or by order of a court of law, or its surrender without the written consent of the board, shall not, during any period in which it may be renewed, restored, reissued, or reinstated, deprive the board of its authority to institute or continue a disciplinary proceeding against the licensee upon any ground provided by law or to enter an order suspending or revoking the license or otherwise taking disciplinary action against the licensee on any such ground.

6. Code sections 3024 and 3090 provide that the Board may take disciplinary action against any optometry license issued by the Board, including, but not limited to, revocation or suspension of the license, in addition to placing terms and conditions on the license.

7. This petition to revoke probation is brought pursuant to Condition No. 12 of the Decision and Order in Case No. 2003-181 which states:

> VIOLATION OF PROBATION - If Respondent violates the conditions of his probation, the Board, after giving the Respondent notice and an opportunity to be heard, may set aside the stay order and impose the stayed discipline (revocation/suspension) of the Respondent's license.
>
> If, during the period of probation, an accusation or petition to revoke probation has been filed against Respondent's license or the Attorney General's Office has been requested to prepare an accusation or petition to revoke probation against Respondent's license, the probationary period shall automatically be extended and shall not expire until the accusation or petition has been acted upon by the Board.

8. Respondent's probation is subject to revocation because he failed to comply with several terms of probation, as set forth below.

///

///

FIRST CAUSE TO REVOKE PROBATION

(Failure to Comply with Board's Probation Program)

9. At all times after the effective date of Respondent's probation, Condition 3 stated:

COMPLY WITH THE BOARD'S PROBATION PROGRAM - Respondent shall fully comply with the conditions of the Probation Program established by the Board and cooperate with representatives of the Board in its monitoring and investigation of the respondent's compliance with the Board's Probation Program. Respondent shall inform the Board in writing within no more than 15 days of any address change and shall at all times maintain an active, current license status with the Board, including during any period of suspension.

Respondent shall comply with the Board's probation surveillance program, including but not limited to, allowing access to respondent's optometric practice and patient records upon request of the Board or its agent. Upon successful completion of probation, respondent's license shall be fully restored.

10. Respondent's probation is subject to revocation because he failed to comply with Probation Condition 3, by failing to submit the required quarterly written reports to the Board, by failing to obtain a Board approved supervisor, by failing to take the law portion of the licensing examination, and by failing to complete a continuing education course in ethics, the details of which are set forth with more particularity below.

SECOND CAUSE TO REVOKE PROBATION

(Failure to Submit Written Reports)

11. At all times after the effective date of Respondent's probation, Condition 6 stated:

SUBMIT WRITTEN REPORTS – Respondent during the period of probation, shall submit or cause to be submitted such written reports/declarations and verification of actions under penalty of perjury, as required by the Board. These reports/declarations shall contain statements relative to Respondent's compliance with all of the conditions of the Board's Probation Program. Respondent shall immediately execute all release of information forms as may be required by the Board or its representatives.

Respondent shall provide a copy of this decision to the optometric regulatory agency in every state and territory in which he has an optometry license.

12. Respondent's probation is subject to revocation because he failed to comply with Probation Condition 6, in that the Board has required that he submit quarterly reports, and Respondent has only submitted two quarterly reports documenting his compliance with the terms of probation during the entire probationary period.

///

THIRD CAUSE TO REVOKE PROBATION

(Failure to Obtain an Approved Supervisor)

13. At all times after the effective date of Respondent's probation, Condition 9 stated:

SUPERVISION – Respondent shall obtain prior approval from the Board regarding Respondent's level of supervision and/or collaboration before commencing or continuing the practice of optometry.

Respondent shall practice only under the direct supervision of an optometrist in good standing (no current discipline) with the Board of Optometry, unless alternative methods of supervision and/or collaboration (e.g., with an ophthalmologist or other physician) are approved. Respondent's level of supervision and/or collaboration may include, but is not limited to the following:

The individual providing supervision and/or collaboration has person-to-person communication with Respondent at least twice during each work day.

14. Respondent's probation is subject to revocation because he failed to comply with Probation Condition 9, by failing to obtain a Board approved supervisor as referenced above.

FOURTH CAUSE TO REVOKE PROBATION

(Failed to Take Law Portion of Licensing Examination)

15. At all times after the effective date of Respondent's probation, Condition 14 stated:

RE-EXAMINATION – Within 60 days of the effective date of this decision, or within some other time as prescribed in writing by the board, Respondent shall take and pass the law portion of the licensing exam. If respondent fails this examination, Respondent must take and pass a re-examination as approved by the board. The waiting period between repeat examinations shall be at six-month intervals until success is achieved. The Respondent shall pay the cost of any such examination.

If Respondent fails the first examination, Respondent shall cease the practice of optometry until the re-examination has been successfully passed as evidenced by written notice to Respondent from the board. Failure to pass the required examination no later than 100 days prior to the termination date of probation shall constitute a violation of probation.

16. Respondent's probation is subject to revocation because he failed to comply with Probation Condition 14, in that he failed to take the examination referenced above.

///

///

///

///

FIFTH CAUSE TO REVOKE PROBATION

(Failed to Take Ethics Course)

17. At all times after the effective date of Respondent's probation, Condition 15 stated:

> CONTINUING EDUCATION COURSE IN ETHICS – Within 90 days of the effective date of the Board's Decision and Order, Respondent shall submit the name of a continuing education course in ethics for prior Board approval. Said course must be taken and completed within one year from the effective date of the Board's Decision and Order. The costs associated with the ethics course shall be paid by the Respondent. Units obtained for an approved course in ethics shall not be used for continuing education units required for renewal of licensure. Respondent shall submit to the Board the original transcripts or certificates of completion for the ethics course. The Board shall return the original documents to respondent after photocopying them for its records.

18. Respondent's probation is subject to revocation in that he failed to comply with Probation Condition 15, by failing to take the required continuing education course in ethics referenced above.

PRAYER

WHEREFORE, Complainant requests that a hearing be held on the matters herein alleged, and that following the hearing, the State Board of Optometry issue a decision:

1. Revoking the probation in Case No. 2003-181 and imposing the disciplinary order that was stayed thereby revoking Certificate of Registration to Practice Optometry No. 9742 issued to Phillip McEldowney;

2. Revoking or suspending Certificate of Registration to Practice Optometry No. 9742, issued to Phillip McEldowney;

3. Taking such other and further action as deemed necessary and proper.

DATED: 5/20/10

Mona Maggio

MONA MAGGIO
Executive Officer
State Board of Optometry
Department of Consumer Affairs
State of California
Complainant

SD2010800631

Exhibit A

Decision and Order

State Board of Optometry Case No. 2003-181

BEFORE THE
STATE BOARD OF OPTOMETRY
DEPARTMENT OF CONSUMER AFFARIS
STATE OF CALIFORNIA

In the Matter of the Accusation Against: PHILLIP MC ELDOWNEY, O.D. 6420 East Oakview Lane Anaheim, CA 92807 Optometric Registration No. 9742 Respondent.	Case No. 2003-181 OAH No. 2006010729

DECISION AND ORDER

The attached Stipulated Settlement and Disciplinary Order is hereby adopted by the State Board of Optometry, as its Decision in this matter.

This Decision shall become effective on July 10, 2006.

It is so ORDERED June 8, 2006.

FOR THE STATE BOARD OF OPTOMETRY

BILL LOCKYER, Attorney General
of the State of California
SHERRY L. LEDAKIS, State Bar No. 131767
Deputy Attorney General
California Department of Justice
110 West "A" Street, Suite 1100
San Diego, CA 92101

P.O. Box 85266
San Diego, CA 92186-5266
Telephone: (619) 645-2078
Facsimile: (619) 645-2061

Attorneys for Complainant

BEFORE THE
STATE BOARD OF OPTOMETRY
DEPARTMENT OF CONSUMER AFFAIRS
STATE OF CALIFORNIA

In the Matter of the Accusation Against: PHILLIP MC ELDOWNEY, O.D. 6420 East Oakview Lane Anaheim, CA 92807 Optometric Registration No. 9742 Respondent.	Case No. 2003-181 OAH No. 2006010729 STIPULATED SETTLEMENT AND DISCIPLINARY ORDER

IT IS HEREBY STIPULATED AND AGREED by and between the parties to the above-entitled proceedings that the following matters are true:

PARTIES

1. Taryn Smith, Complainant, is the Executive Officer of the Board of Optometry. She brought this action solely in her official capacity and is represented in this matter by Bill Lockyer, Attorney General of the State of California, by Sherry L. Ledakis, Deputy Attorney General.

2. Respondent Phillip Mc Eldowney, O.D., respondent, is representing himself in this proceeding and has chosen not to exercise his right to be represented by counsel.

3. On or about September 6, 1991, the Board of Optometry issued Optometric Registration No. 9742 to Phillip Mc Eldowney, O.D. The Registration will expire on October 31, 2007, unless renewed.

JURISDICTION

4. Accusation No. 2003-181 was filed before the Board, and is currently pending against Respondent. The Accusation and all other statutorily required documents were properly served on respondent on December 8, 2005. Respondent timely filed his Notice of Defense contesting the Accusation. A copy of Accusation No. 2003-181 is attached as exhibit A, and incorporated herein by reference.

ADVISEMENT AND WAIVERS

5. Respondent has carefully read, and understands the charges and allegations contained in Accusation No. 2003-181. Respondent has also carefully read, and understands the effects of this Stipulated Settlement and Disciplinary Order.

6. Respondent is fully aware of his legal rights in this matter, including the right to a hearing on the charges and allegations in the Accusation; the right to be represented by counsel at his own expense; the right to confront and cross-examine the witnesses against him; the right to present evidence and to testify on his own behalf; the right to the issuance of subpoenas to compel the attendance of witnesses and the production of documents; the right to reconsideration and court review of an adverse decision; and all other rights accorded by the California Administrative Procedure Act and other applicable laws.

7. Respondent voluntarily, knowingly, and intelligently waives and gives up each and every right set forth above.

CULPABILITY

8. Respondent admits the truth of each and every charge and allegation in Accusation No. 2003-181.

9. Respondent agrees that his Optometric Registration is subject to discipline and he agrees to be bound by the Board's imposition of discipline as set forth in the Disciplinary Order below.

///

///

///

CONTINGENCY

10. The parties understand and agree that facsimile copies of this Stipulated Settlement and Disciplinary Order, including facsimile signatures thereto, shall have the same force and effect as the originals.

11. In consideration of the foregoing admissions and stipulations, the parties agree that the Board may, without further notice or formal proceeding, issue and enter the following Disciplinary Order:

DISCIPLINARY ORDER

IT IS HEREBY ORDERED that Optometric Registration No. 9742 issued to Phillip Mc Eldowney, O.D. is revoked. However, the revocation is stayed and respondent is placed on probation for five (5) years on the following terms and conditions.

SEVERABILITY CLAUSE – Each condition of probation contained herein is a separate and distinct condition. If any condition of this Order, or any application thereof, is declared unenforceable in whole, in part, or to any extent, the remainder of this Order, and all other applications thereof, shall not be affected. Each condition of this Order shall separately be valid and enforceable to the fullest extent permitted by law.

(1) ACTUAL SUSPENSION OF LICENSE - Respondent is suspended from the practice of optometry for two (2) weeks to be served within thirty (30) days of the effective date of the decision..

During the suspension period, all probation conditions are in full force and effect except those relating to actual optometric practice. This period of suspension will not apply to the reduction of this probationary time period.

(2) OBEY ALL LAWS - Respondent shall obey all federal, state and local laws. A full and detailed account of any and all violations of law shall be reported by the respondent to the Board in writing within seventy-two (72) hours of occurrence. To permit monitoring of compliance with this condition, respondent shall submit completed fingerprint forms and fingerprint fees within 45 days of the effective date of the decision, unless previously submitted as part of the licensure application process.

CRIMINAL COURT ORDERS: If respondent is under criminal court orders, including probation or parole, and the order is violated, this shall be deemed a violation of these probation conditions, and may result in the filing of an accusation and/or petition to revoke probation.

(3) COMPLY WITH THE BOARD'S PROBATION PROGRAM - Respondent shall fully comply with the conditions of the Probation Program established by the Board and cooperate with representatives of the Board in its monitoring and investigation of the respondent's compliance with the Board's Probation Program. Respondent shall inform the Board in writing within no more than 15 days of any address change and shall at all times maintain an active, current license status with the Board, including during any period of suspension.

Respondent shall comply with the Board's probation surveillance program, including but not limited to, allowing access to respondent's optometric practice and patient records upon request of the Board or its agent. Upon successful completion of probation, respondent's license shall be fully restored.

(4) REPORT IN PERSON - Respondent, during the period of probation, shall appear in person at interviews/meetings as directed by the Board or its designated representatives.

(5) RESIDENCY, PRACTICE, OR LICENSURE OUTSIDE OF STATE - Periods of residency or practice as an optometrist outside of California shall not apply toward a reduction of this probation time period. Respondent's probation is tolled, if and when he or she resides outside of California. The respondent must provide written notice to the Board within 15 days of any change of residency or practice outside the state, and within 30 days prior to re-establishing residency or returning to practice in this state.

Respondent shall provide a list of all states and territories where he or she has ever been licensed as an optometrist. Respondent shall further provide information regarding the status of each license and any changes in such license status during the term of probation.

///

Respondent shall inform the Board if he applies for or obtains a new optometry license during the term of probation.

(6) SUBMIT WRITTEN REPORTS - Respondent, during the period of probation, shall submit or cause to be submitted such written reports/declarations and verification of actions under penalty of perjury, as required by the Board. These reports/declarations shall contain statements relative to respondent's compliance with all of the conditions of the Board's Probation Program. Respondent shall immediately execute all release of information forms as may be required by the Board or its representatives.

Respondent shall provide a copy of this decision to the optometric regulatory agency in every state and territory in which he or she has an optometry license.

(7) FUNCTION AS AN OPTOMETRIST- Respondent, during the period of probation, shall engage in the practice of optometry in California for a minimum of 24 hours per week for 6 consecutive months, each year, for each year of probation..

For purposes of compliance with the section, "engage in the practice of optometry" may include, when approved by the Board, volunteer work as an optometrist, or work in any non-direct patient care position that requires licensure as an optometrist.

If respondent has not complied with this condition during the probationary term, and the respondent has presented sufficient documentation of his or her good faith efforts to comply with this condition, and if no other conditions have been violated, the Board, in its discretion, may grant an extension of the respondent's probation period up to one year without further hearing in order to comply with this condition. During the one year extension, all original conditions of probation shall apply.

(8) EMPLOYMENT APPROVAL AND REPORTING REQUIREMENTS - Respondent shall obtain prior approval from the Board before commencing or continuing the practice of optometry. Respondent shall cause to be submitted to the Board any available performance evaluations and other employment related reports as an optometrist upon request of the Board.

///

If working as an employee, respondent shall provide a copy of this decision to his or her employer and immediate supervisors prior to commencement of the practice of optometry.

In addition to the above, respondent shall notify the Board in writing within seventy-two (72) hours after he obtains any optometric employment. Respondent shall notify the Board in writing within seventy-two (72) hours after he is terminated or separated, regardless of cause, from any optometric employment with a full explanation of the circumstances surrounding the termination or separation.

(9) SUPERVISION - Respondent shall obtain prior approval from the Board regarding respondent's level of supervision and/or collaboration before commencing or continuing the practice of optometry.

Respondent shall practice only under the direct supervision of an optometrist in good standing (no current discipline) with the Board of Optometry, unless alternative methods of supervision and/or collaboration (e.g., with an ophthalmologist or other physician) are approved. Respondent's level of supervision and/or collaboration may include, but is not limited to the following:

The individual providing supervision and/or collaboration has person-to-person communication with respondent at least twice during each work day.

(10) EMPLOYMENT LIMITATIONS - Respondent shall not work in any health care setting as a supervisor of optometrists. The Board may additionally restrict respondent from supervising technicians and/or unlicensed assistive personnel on a case-by-case basis. Respondent shall not work as a faculty member in an approved school of optometry or as an instructor in a Board approved continuing education program. Respondent shall work only on a regularly assigned, identified and predetermined worksite(s).

If respondent is working or intends to work in excess of 40 hours per week, the Board may request documentation to determine whether there should be restrictions on the hours of work.

(11) COST RECOVERY - Respondent shall pay to the Board costs associated with its investigation and enforcement pursuant to Business and Professions Code Section 125.3

in the amount of $8,492.00. Respondent shall be permitted to pay these costs in a payment plan approved by the Board, with payments to be completed no later than three months prior to the end of the probation term.

If respondent has not complied with this condition during the probationary term, and respondent has presented sufficient documentation of his or her good faith efforts to comply with this condition, and if no other conditions have been violated, the Board, in its discretion, may grant an extension of the respondent's probation period up to one year without further hearing in order to comply with this condition. During the one year extension, all original conditions of probation will apply.

(12) VIOLATION OF PROBATION - If respondent violates the conditions of his probation, the Board, after giving the respondent notice and an opportunity to be heard, may set aside the stay order and impose the stayed discipline (revocation/suspension) of the respondent's license.

If, during the period of probation, an accusation or petition to revoke probation has been filed against respondent's license or the Attorney General's Office has been requested to prepare an accusation or petition to revoke probation against the respondent's license, the probationary period shall automatically be extended and shall not expire until the accusation or petition has been acted upon by the Board.

(13) LICENSE SURRENDER - During respondent's term of probation, if he ceases practicing due to retirement or health reasons, or is otherwise unable to satisfy the conditions of probation, respondent may surrender his or her license to the Board. The Board reserves the right to evaluate respondent's request and to exercise its discretion whether to grant the request, or to take any other action deemed appropriate and reasonable under the circumstances, without further hearing. Upon formal acceptance of the tendered license and wall certificate, respondent will no longer be subject to the conditions of probation.

Surrender of respondent's license shall be considered a disciplinary action and shall become a part of respondent's license history with the Board. An optometrist whose license

///

has been surrendered may petition the Board for reinstatement no sooner than one year from the effective date of the disciplinary decision.

(14) REEXAMINATION - Within 60 days of the effective date of this decision, or within some other time as prescribed in writing by the board, respondent shall take and pass the law portion of the licensing exam. If respondent fails this examination, respondent must take and pass a re-examination as approved by the board. The waiting period between repeat examinations shall be at six-month intervals until success is achieved. The respondent shall pay the cost of any such examination.

If respondent fails the first examination, respondent shall cease the practice of optometry until the re-examination has been successfully passed as evidenced by written notice to respondent from the board. Failure to pass the required examination no later than 100 days prior to the termination date of probation shall constitute a violation of probation.

(15) CONTINUING EDUCATION COURSE IN ETHICS. Within 90 days of the effective date of the Board's Decision and Order, respondent shall submit the name of a continuing education course in ethics for prior Board approval. Said course must be taken and completed within one year from the effective date of the Board's Decision and Order. The costs associated with the ethics course shall be paid by the respondent. Units obtained for an approved course in ethics shall not be used for continuing education units required for renewal of licensure. Respondent shall submit to the Board the original transcripts or certificates of completion for the ethics course. The Board shall return the original documents to respondent after photocopying them for its records.

(16) PRACTICE BY LEGAL NAME. Respondent shall use his legal name in all his professional endeavors as an optometrist, including but limited to, any and all advertising, signage, business cards, letterhead, and name tags. He shall be known to clients and staff as Phillip McEldowney, O.D. Any use of any other name, including Dr. Bo, shall be a violation of probation.

///

///

(17) HAVE NO BUSINESS RELATIONSHIP WITH A REGISTERED DISPENSING OPTICIAN. Respondent shall have no membership, proprietary interest, coownership, landlord-tenant relationship, or any profit-sharing arrangement in any form, directly or indirectly, with a registered dispensing optician. Any violation of this section constitutes a violation of respondent's probation.

ACCEPTANCE

I have carefully read the Stipulated Settlement and Disciplinary Order. I understand the stipulation and the effect it will have on my Optometric Registration. I enter into this Stipulated Settlement and Disciplinary Order voluntarily, knowingly, and intelligently, and agree to be bound by the Decision and Order of the Board of Optometry.

DATED: 5/5/06

PHILLIP MC ELDOWNEY, O.D.
Respondent

ENDORSEMENT

The foregoing Stipulated Settlement and Disciplinary Order is hereby respectfully submitted for consideration by the State Board of Optometry.

DATED: 5/8/06

BILL LOCKYER, Attorney General
of the State of California

SHERRY L. LEDAKIS
Deputy Attorney General

Attorneys for Complainant

DOJ Matter ID: SD2005700908
80071998.wpd

BILL LOCKYER, Attorney General
of the State of California
SHERRY L. LEDAKIS, State Bar No. 131767
Deputy Attorney General
California Department of Justice
110 West "A" Street, Suite 1100
San Diego, CA 92101

P.O. Box 85266
San Diego, CA 92186-5266
Telephone: (619) 645-2078
Facsimile: (619) 645-2061

Attorneys for Complainant

BEFORE THE
STATE BOARD OF OPTOMETRY
DEPARTMENT OF CONSUMER AFFAIRS
STATE OF CALIFORNIA

In the Matter of the Accusation Against:	Case No. 2003 181
PHILLIP MC ELDOWNEY	OAH No.
6420 East Oakview Lane Anaheim, CA 92807 Optometric Registration No. No. OPT9742 Statement of Licensure No. No. 2855 Respondent.	**ACCUSATION**

Complainant alleges:

PARTIES

1. Taryn Smith brings this Accusation solely in her official capacity as the Executive Officer of the State Board of Optometry, Department of Consumer Affairs.

2. On or about September 6, 1991, the State Board of Optometry issued Optometric Registration Number 9742 to Phillip Mc Eldowney, respondent, with an address of record of 6420 East Oakview Lane, Anaheim, California, 92807. This license expired on October 31, 2003, and has not be renewed.

3. On or about September 16, 1998, the State Board of Optometry issued Statement of Licensure Number 2855 to respondent to practice optometry at an additional place of employment with Daniel Quon at 333 Bristol Street #1872, Costa Mesa, CA 92626. The Statement of Licensure expired on October 31, 1999, and has not been renewed.

JURISDICTION

4. This Accusation is brought before the State Board of Optometry, Board, Department of Consumer Affairs, under the authority of the following laws. All section references are to the Business and Professions Code unless otherwise indicated.

a. Section 3101 provides:

The obtaining of any fee by fraud or misrepresentation constitutes unprofessional conduct.

b. Section 3096.6 provides in part:

Knowingly making or signing any certificate or other document directly or indirectly related to the practice of optometry that falsely represents the existence or nonexistence of a state of facts constitutes unprofessional conduct.

c. Section 3127 provides:

It is unlawful to practice optometry in this State without having at the time of doing so a valid, unrevoked, and unexpired certificate of registration as an optometrist.

d. Section 3040 provides:

It is unlawful for any person to engage in the practice of optometry or to display a sign or in any manner to advertise or hold himself out as an optometrist without first having obtained a certificate of registration from the Board.

e. Section 3128 provides:

It is unlawful to advertise by displaying a sign or otherwise or hold himself out to be an optometrist without having at the time of so doing a valid unrevoked certificate of registration from the Board.

f. Section 3070 provides:

Before engaging in the practice of optometry, each registered optometrist shall notify the board in writing of the address or addresses where he is to engage, or intends to engage, in the practice of optometry and, also, of any changes in his place of practice. The practice of optometry is the performing or the controlling of any of the acts set forth in Section 3041. Any notice required to be given by the board to any registered optometrist may be given by United States mail to this address, postage thereon prepaid.

///

g. Section 3075 provides:

(a) Each holder of a certificate of registration or a certificate of issuance of his certificate of registration shall keep it conspicuously posted in his office or place of practice at all times.

(b) The board may, by rule or regulation, provide that, when the holder of a certificate of registration has more than one office or place of practice or is employed to practice optometry in more than one office or place of practice and it is infeasible to have his certificate of registration posted in more than one of such offices or places of practice, he shall have such other evidence as may be prescribed by the board that he is licensed to practice optometry in California conspicuously posted in each of such additional offices or places of practice which he has or where he is employed to practice optometry. When the board is requested by a holder of a certificate of registration or certificate of issuance of his certificate of registration to issue such other evidence that he is licensed to practice optometry, the board may charge a fee not to exceed twenty-five dollars ($25) for each issuance of such other evidence.

h. Section 3077 provides in part:

As used in this section "office" means any office or other place for the practice of optometry. (a) No person, singly or in combination with others, may have an office unless he or she is registered to practice optometry under this chapter.

. . .

(c) On and after October 1, 1959, no optometrist, and no two or more optometrists jointly, may have more than one office unless he, or she, or they comply with the provisions of this chapter as to an additional office. Such additional office, for the purposes of this chapter, constitutes a branch office.

5. This Accusation is also brought before the State Board of Optometry under the authority of Title 16 of the California Code of Regulations.

A. Section 1505 provides:

(a) The notification of intention to engage in the practice of optometry which is required by Section 3070 of the code shall be addressed to the Board at its office in Sacramento.

(b) Such notification of intention to engage in the practice of optometry includes notifying the Board of intention to accept employment to practice optometry, the name or names of the optometrist or optometrists, or those who by law may employ an optometrist and the address or addresses of the office or offices at which the certificate holder will be employed.

B. Section 1506(c)(2) provides:

Where the optometrist does not own a practice, singly or jointly with any others, but practices optometry in two or more offices as an employee, he/she shall inform the Board in writing as to which of such offices shall be deemed his/her principal place of practice.

///

6. Section 125.3 of the Code provides, in pertinent part, that the Board may request the administrative law judge to direct a licentiate found to have committed a violation or violations of the licensing act to pay a sum not to exceed the reasonable costs of the investigation and enforcement of the case.

FACTS

7. On November 18, 2003, the Board received a complaint from a consumer who said he had gone to Optical Land, an optical company, had his eyes examined by Dr. Bo, but Dr. Bo had not provided him with a prescription. The Board does not have a record of anyone named, "Dr. Bo" working at Optical Land.

8. On May 28, 2004, a Cease and Desist Order was sent to respondent by the Board of Optometry. This order informed respondent that his optometric license was expired and that he was not validly licensed or authorized to practice optometry. It further informed him that in order to reinstate his certificate, he needed to pay the renewal fee of $300, plus a $25 delinquent fee, and to submit documentation of completion of 50 hours of continuing education courses. Respondent was told to cease and desist practicing optometry until such time as his certificate had been reinstated.

9. On July 19, 2004, a Notice of Citation and Administrative Fine was sent to respondent. He was found to be in violation of several code sections concerning, *inter alia*, practicing without a valid unexpired certificate, failing to notify the Board of his change in address, failing to display his certificate of licensure in multiple offices, and holding himself out as an optometrist without a valid license, with a total fine assessment of $8,201.00. Respondent failed to respond to this Notice of Citation.

10. On June 16, 2005, an undercover operation was conducted at Optical Land, 9580 Garden Grove Blvd., #105, Garden Grove, California. Investigators Carceres and Moore conducted the investigation.

11. On June 16, 2005, Investigator Carceres had an appointment for an eye examination at Optical Land. She was introduced to "Dr. Bo."

///

12. After filling out paperwork, Dr. Bo took Investigator Carceres out of Optical Land to a building adjacent to Optical Land where he performed the eye examination.

13. When Investigator Carceres and Dr. Bo exited the examination room they were met by Investigator Moore. Investigator Carceres told Moore she had received an eye examination from respondent. She handed Moore a receipt for $40.00 for the examination. The receipt contained the business name, "Optical Land," 9580 Garden Grove Blvd., Ste. 105, Garden Grove, CA 92844.

14. Respondent was asked for his identification. His driver's license identified him as Phillip Joseph Mc Eldowney. Respondent provided the investigators with his optometric license number. A call to the Board of Optometry confirmed the fact that respondent's optometric license expired on October 31, 2003.

15. The investigators entered the examination room and photographed the room, the equipment and the walls.

16. When the investigators informed respondent that his license was expired, he told them he had neglected to complete his continuing education requirements and therefore, allowed his license to expire.

17. Peter Kim, the owner of Optical Land, told Investigator Moore that respondent had been performing eye examinations at that location for more than one year.

FIRST CAUSE FOR DISCIPLINE

(Obtaining Fee by Fraud or Misrepresentation)

18. Respondent is subject to disciplinary action under section 3101 of the Code, in that he obtained a fee by fraud or misrepresentation, as more particularly set forth above in paragraph 7 through and including paragraph 17.

SECOND CAUSE FOR DISCIPLINE

(Knowingly Made or Signed a Document Directly Related to Optometry that Falsely Represents the Existence of a State of Facts)

19. Respondent is subject to disciplinary action under section 3096.6, in that he knowingly made or signed a document directly related to the practice of optometry that falsely

represented the existence of a state of facts, *i.e.,* indicating that he had a valid unexpired license and was therefore competent to perform eye examinations and write prescriptions, as more particularly set forth above in paragraph 7 through and including paragraph 17.

THIRD CAUSE FOR DISCIPLINE

(Unlawful Practice of Optometry With an Expired License)

20. Respondent is subject to disciplinary action under sections 3040 and 3127, in that he unlawfully practiced optometry while his license was expired as more particularly set forth above in paragraph 7 through and including paragraph 17.

FOURTH CAUSE FOR DISCIPLINE

(Unlawfully Holding Himself Out as an Optometrist)

21. Respondent is subject to disciplinary action under section 3128, in that he held himself out to be an optometrist when his license was expired and he was not lawfully licensed to practice optometry, as more particularly set forth above in paragraph 7 through and including paragraph 17.

FIFTH CAUSE FOR DISCIPLINE

(Failure to Notify the Board of Place of Practice)

22. Respondent is subject to disciplinary action under section 3070 of the Code, and Title 16 of the California Code of Regulations, section 1505, in that he failed to notify the board in writing of the address or addresses where he engaged, or intended to engage, in the practice of optometry and, also, of any changes in his place of practice, as more particularly set forth above in paragraph 7 through and including paragraph 17.

SIXTH CAUSE FOR DISCIPLINE

(Failure to Post Registration and License)

23. Respondent is subject to disciplinary action under section 3075, in that he failed to keep his certificate of registration conspicuously posted in his office or place of practice at all times, as more particularly set forth in paragraph 7 through and including paragraph 17.

///

///

SEVENTH CAUSE FOR DISCIPLINE

(Unlawful Practice of Optometry)

24. Respondent is subject to disciplinary action under section 3077, in that he performed eye examinations at an optometric office without being lawfully registered to practice optometry, as more particularly set forth in paragraph 7 through and including paragraph 17.

EIGHTH CAUSE FOR DISCIPLINE

(Failed to Inform the Board as to Which Office was the Principle Place of Practice)

25. Respondent is subject to disciplinary action under Title 16 of the California Code of Regulations, section 1506, in that he failed to inform the Board in writing as to which office would be deemed his principal place of practice, as more particularly set forth in paragraph 7 through and including paragraph 17.

PRAYER

WHEREFORE, Complainant requests that a hearing be held on the matters herein alleged, and that following the hearing, the State Board of Optometry issue a decision:

1. Revoking or suspending Optometric Registration No. Number 9742, issued to Phillip Mc Eldowney.

2. Revoking or suspending Statement of Licensure No. Number 2855, issued to Phillip Mc Eldowney.

3. Ordering Phillip Mc Eldowney to pay the State Board of Optometry the reasonable costs of the investigation and enforcement of this case, pursuant to Business and Professions Code section 125.3.

4. Taking such other and further action as deemed necessary and proper.

DATED: 11/9/05

Taryn Smith

TARYN SMITH, EXECUTIVE OFFICER
State Board of Optometry
Department of Consumer Affairs
State of California
Complainant

CALIFORNIA STATE BOARD OF OPTOMETRY

STATE BOARD OF OPTOMETRY
2420 DEL PASO ROAD, SUITE 255, SACRAMENTO, CA 95834
P (916) 575-7170 F (916) 575-7292 www.optometry .ca.gov

PROBATION COMPLIANCE REPORT

Name of Optometrist: Dr. Philip McEldowney, O.D.
Case #: D1 2003-181
OPT License: #9742
Probation Monitor: Jessica Sieferman
Jurisdictional Document: Decision and Disciplinary Order No. 2010061376
Term of Probation: **February 18, 2011 – February 18, 2016**

Disclaimer: This report was prepared on May 14, 2012 and reflects compliance up to this date. Compliance is based upon documentation contained in Dr. McEldowney's complete probation file. The complete probation file (100+ pages) can be made available to Board members upon request.

1. OBEY ALL LAWS:
Compliant. There is no public record of any violations, and Dr. McEldowney has not reported violating any laws since the effective date of the Decision.

2. QUARTERLY REPORTS:
Compliant. Dr. McEldowney has submitted all quarterly reports in the required timeframe.

3. PROBATION MONITORING PROGRAM:
Compliant. Dr. McEldowney has complied with his conditions of probation and has been cooperative throughout his term of probation.

4. FUNCTION AS AN OPTOMETRIST:
Compliant. Dr. McEldowney has worked above the required 24 hours per week, pursuant to his Order.

5. NOTICE TO EMPLOYER:
N/A. Dr. McEldowney is self-employed.

6. NOTICE TO PATIENTS:
Compliant. Dr. McEldowney submitted his notice to patients within the required timeframe and has it posted in his office.

7. CHANGES OF EMPLOYMENT OR RESIDENCE:
Compliant. Dr. McEldowney has not had any changes of employment or residence.

8. COST RECOVERY:
Compliant. Dr. McEldowney has paid his cost recovery in full.

9. TAKE AND PASS LICENSURE EXAMINATION:
Compliant. Dr. McEldowney took and passed the CLRE on his first attempt.

10. VALID LICENSE STATUS:

Compliant. Dr. McEldowney's license has remained, current and valid throughout his probationary term.

11. TOLLING FOR OUT-OF-STATE RESIDENCE OR PRACTICE:

Compliant. Dr. McEldowney has not resided or practiced outside of California during his probationary term.

12. LICENSE SURRENDER:

Dr. McEldowney has not surrendered his license.

13. VIOLATION OF PROBATION:

Dr. McEldowney has not received any probation violations that have resulted in the Board's filing a petition to revoke probation or an accusation.

14. COMPLETION OF PROBATION:

Upon completion of probation, Dr. McEldowney's license will be fully restored.

15. DIRECT SUPERVISION:

Compliant.

16. SUPERVISOR REPORTS:

Compliant.

17. EMPLOYMENT LIMITATIONS:

Compliant. Dr. McEldowney has complied with all restrictions of this condition.

18. CONTINUING EDUCATION COURSES:

Compliant. Dr. McEldowney successfully completed his continuing education course with Dr. Berman, O.D.

19. PRACTICE BY LEGAL NAME: Are you currently practicing by your legal name and no other name?

Compliant. Dr. McEldowney has presented the Board with all business devices showing he is practicing using his legal name.

20. HAVE NO BUSINESS RELATIONSHIP WITH A REGISTERED DISPENSING OPTICIAN:

Compliant. Dr. McEldowney has reported to have no membership, proprietary interest, co-ownership, landlord-tenant relationship, or any profit-sharing arrangement with a RDO.

§ 1516. Criteria for Rehabilitation.

(a) When considering the denial of a certificate of registration under Section 480 of the Code, the Board, in evaluating the rehabilitation of the applicant and his/her present eligibility for a certificate of registration, will consider the following criteria:

(1) The nature and severity of the act(s) or crime(s) under consideration as grounds for denial.

(2) Evidence of any act(s) committed subsequent to the act(s) or crime(s) under consideration as grounds for denial which also could be considered as grounds for denial under Section 480 of the Code.

(3) The time that has elapsed since commission of the act(s) or crime(s) referred to in subdivision (1) or (2).

(4) The extent to which the applicant has complied with any terms of parole, probation, restitution, or any other sanctions lawfully imposed against the applicant.

(5) Evidence, if any, of rehabilitation submitted by the applicant.

(b) When considering the suspension or revocation of a certificate of registration on the grounds that the registrant has been convicted of a crime, the Board, in evaluating the rehabilitation of such person and his/her present eligibility for a license, will consider the following criteria:

(1) Nature and severity of the act(s) or offense(s).

(2) Total criminal record.

(3) The time that has elapsed since commission of the act(s) or offense(s).

(4) Whether the licensee has complied with any terms of parole, probation, restitution or any other sanctions lawfully imposed against the licensee.

(5) If applicable, evidence of expungement proceedings pursuant to Section 1203.4 of the Penal Code.

(6) Evidence, if any, of rehabilitation submitted by the licensee.

(c) When considering a petition for reinstatement of a certificate of registration under Section 11522 of the Government Code, the Board shall evaluate evidence of rehabilitation submitted by the petitioner, considering those criteria of rehabilitation specified in subsection (b).

Note: Authority cited: Sections 3023, 3023.1 and 3025, Business and Professions Code. Reference: Sections 475, 480, 481 and 482, Business and Professions Code; and Section 11522, Government Code.

STATE BOARD OF OPTOMETRY
2450 DEL PASO ROAD, SUITE 105, SACRAMENTO, CA 95834
P (916) 575-7170 F (916) 575-7292 www.optometry .ca.gov

STANDARDS FOR REINSTATEMENT OR REDUCTION OF PENALTY

CALIFORNIA STATE BOARD OF OPTOMETRY

In petitioning for reinstatement or reduction of penalty under Government Code Section 11522, the petitioner has the burden of proof demonstrating that he or she has the necessary and current qualifications and skills to safely engage in the practice of optometry within the scope of Current law and accepted standards of practice. In reaching its determination the Board may, but is not limited to, consider the following:

A. The original violation(s) for which action was taken against the petitioner's license, including:

1. The type, severity, number and length of violation(s).
2. Whether the violation involved intent, negligent or other unprofessional conduct.
3. Actual or potential harm to the public, patients or others.
4. The length of time since the violation(s) was committed.
5. Petitioner's cooperation or lack thereof in the investigation of the original offense.

B. Prior actions by the Board, any state, local or federal agency or court including:

1. Compliance with all terms of probation, parole, previous discipline or other lawfully imposed sanctions including any order of restitution.
2. Whether the petitioner is currently on or has been terminated from probation or other lawfully imposed sanction.
3. The petitioner's legal and regulatory history prior to and since the violation(s).

C. The petitioner's attitude toward his or her commission of the original violation(s) and his or her attitude in regard to compliance with legal sanctions and rehabilitative efforts.

D. The petitioner's documented rehabilitative efforts including:

1. Efforts to maintain and/or update professional skills and knowledge through continuing education or other methods.
2. Efforts to establish safeguards to prevent repetition of the original violation(s) including changes or modifications in policies, structure, systems, or methods of behavior applicable to the petitioner's optometric practice.
3. Service to the community or charitable groups, non-profit organizations or public agencies.

4. Voluntary restitution to those affected by the original violation(s).
5. Use of appropriate professional medical or psychotherapeutic treatment.
6. Participation in appropriate self-help and/or rehabilitation groups.
7. Use of appropriate peer review mechanisms.
8. Participation in professional optometric organizations or associations.

E. Assessment of the petitioner's rehabilitative and corrective efforts including:

1. Whether the efforts relate to the original violation(s).
2. The date rehabilitative efforts were initiated.
3. The length, time and expense associated with rehabilitative efforts or corrective actions.
4. The assessment and recommendations of qualified professionals directly involved in the petitioner's rehabilitative efforts or acting at the request of the Board, including their description of the petitioner's progress and their prognosis of the petitioner's current ability to practice optometry.
5. Whether the rehabilitative efforts were voluntary and self-motivated, or imposed by order of a government agency or court of competent jurisdiction and complied with as a condition or term of probation.
6. The petitioner's reputation for truth, professional ability and good character since the commission of the original violation(s).
7. The nature and status of ongoing and continuing rehabilitative efforts.
8. The petitioner's compliance or non-compliance with all laws and regulations since the date of the original violation(s).
9. The petitioner's cooperation or non-cooperation in the Board's investigation of petitioner's Petition for Reinstatement or Reduction of Penalty and the facts surrounding that petition.

Nothing in these guidelines shall be construed to prevent the Board from considering any other appropriate and relevant material not within these guidelines in order to assess the Petition for Reinstatement or Reduction of Penalty.

Any statement which petitioner intends to support his or her petition and all witness statements either party intends to introduce at hearing are preferred by the Board to be in the form of an affidavit or declaration rather than merely a letter or unsworn statement.

Memo

2450 Del Paso Road, Suite 105
Sacramento, CA 95834
(916) 575-7170, (916) 575-7292 Fax
www.optometry.ca.gov

To: Board Members **Date:** May 18, 2012

From: Enforcement Staff **Telephone:** (916) 575-7170

Subject: **Agenda Item 4 – Full Board Closed Session**

Pursuant to Government Code Section 1126(c)(3), the Board will meet in closed session for discussion and possible action on disciplinary matters.

Memo

2450 Del Paso Road, Suite 105
Sacramento, CA 95834
(916) 575-7170, (916) 575-7292 Fax
www.optometry.ca.gov

To: Board Members **Date:** May 18, 2012

From: Dr. Lee Goldstein, O.D.
Board President **Telephone:** (916) 575-7170

Subject: **Agenda Item 5– President's Report**

A. Welcome and Introductions

B. April 23-24, 2012: Accreditation Council on Optometric Education (ACOE) Visits Western University of Health Sciences College of Optometry in Pomona.

Dr. Alex Arredondo, Vice President, represented the California State Board of Optometry during this site visit where the ACOE assessed Western University, College of Optometry 's compliance with ACOE standards. Dr. Arredondo served as an observer with the right to fully participate in all team activities, except for executive sessions. Dr. Arredondo was required to observe all ACOE protocol, and must keep confidential all information learned on the site visit.

Western University, College of Optometry holds the pre-accreditation status of preliminary approval. Pursuant to Business and Professions Code Section 3023 and 3025.2, the Board must protect the public health and safety by governing the accreditation of schools, colleges, and universities that provide optometric education. The Board will continue to participate as Western University, College of Optometry goes through the accreditation process (See attached Agenda).

C. Other

Draft Agenda for ACOE Visit to Professional Optometric Degree Program
Western University of Health Sciences College of Optometry
April 22-24, 2012

ACOE Team Primary and Secondary Standards Assignments (Primary/Secondary)
Standard 1 Mission, Goals and Objectives: ***Drs. Reed/Kershenstein***
Standard 2 Curriculum: ***Drs. Scharre/Vollmer***
Standard 3 Research and Scholarly Activity: ***Drs. Scharre/Kershenstein***
Standard 4 Governance, Regional Accreditation, Administration and Finances: ***Drs. Kershenstein/Scharre***
Standard 5 Faculty: ***Drs. Vollmer/Scharre***
Standard 6 Students: ***Drs. Vollmer/Reed***
Standard 7 Facilities, Equipment and Resources: ***Drs. Kershenstein/Reed***
Standard 8 Clinic Management and Patient Care: ***Drs. Reed/Vollmer***

Arrivals on Sunday April 22 in time for team executive session meeting at 6 p.m. The team will be staying at the at the Sheraton Fairplex Hotel

601 West McKinley Avenue
Pomona, California 91768
Phone: (909) 622-2220
Fax: (909) 622-3577

The team will meet in the Syrah Room on the first floor of the Sheraton at 6 p.m. With the time change for all, team members may wish to eat a snack or dinner before the meeting. If desired, the team may also want to go to the hotel restaurant following the meeting if additional sustenance is needed.

Monday April 23

8:00 am	**Meet in lobby to travel to travel via hotel shuttle to the College.**
8:30 am	**Entrance Interview** (Program/University attendees to be designated by the Dean.) • Philip Pumerantz • Gary Gugelchuk • Elizabeth Hoppe • Daniel Kurtz • Robert Gordon • Miki Carpenter Location: Warren Lawless Conference Room
9:30 am	**Tour of facilities** • Elizabeth Hoppe • Daniel Kurtz • Robert Gordon HEC • Zebra Fish Lab #4031 - Josh Cameron • Vision Science Lab #3229B – Chris Chase, Chunming Liu, Jason Shen • Vision Science Lab #2205 – Kristy Remick-Waltman, Efrain Castellanos • Ophthalmic Optics Lab #2207 – Bob Lee • Pre-Clinical Procedures Lab #2219 – Maryke Neiberg • Pre-Clinical Procedures Lab #2209 -- Tiffenie Harris, James Rogala • Ocular Anatomy Lab #2108 – Kierstyn Napier, David Todd • General Science Lab #2110 – Frank Spors • Contact Lens Lab #2124 – Don Egan PCC • Essilor Eyewear Center – Keith Miller, Diego Zhao • Primary Care Module 1 – Raymond Maeda, Dorcas Tsang

	• Primary Care Module 2 – Jasmine Yumori • Primary Care Module 3 – Lance McNaughton, Paul Dobies • Clinical Research Lab – Pinakin Davey • Neuro-Optometric Rehabilitation, Low Vision Rehabilitation – Valerie Wren, Bennett McAllister • Pediatrics, Vision Therapy – Stuart Mann, Kristi Jensen, Kimberly Walker	
11 am	**Standard 1 Mission, Goals and Objectives** Drs. Reed/Kershenstein will meet with: • Elizabeth Hoppe • Chris Chase • Miki Carpenter • Ann Ellis • Lance McNaughton Location: HEC – 3rd Floor Conference Room	**Standard 2 Curriculum** Drs. Scharre/Vollmer will meet with: • Daniel Kurtz • Rob Drescher • Josh Cameron • Tiffenie Harris • Frank Spors • Bob Lee Location: PCC – 2nd Floor Conference Room
Noon	**Open meeting with students –*Lunch Provided for All*** ***No faculty or administrators are to be present.*** Location: HPC – Amphitheater 2	
1:30 pm	**Standard 3 Research and Scholarly Activity:** Drs. Scharre/Kershenstein will meet with: • Daniel Kurtz • Chris Chase • Jason Shen • Frank Spors • Pinakin Davey • Josh Cameron • Miki Carpenter Location: HEC – 3rd Floor Conference Room	**Standard 8 Clinic Management and Patient Care Policies** Drs. Reed/Vollmer will meet with: • Robert Gordon • Raymond Maeda • Joanne Davis • Valerie Wren Location: PCC – 2nd Floor Conference Room
2:45 pm	**Standard 4 Governance, Regional Accreditation, Administration and Finances *(Governance and Administration)*** Drs. Kershenstein/Scharre will meet with: • Elizabeth Hoppe • Gary Gugelchuk • Lori Rees • Miki Carpenter • Raymond Maeda Location: Warren Lawless Conference Room	**Standard 6 Students** Drs. Vollmer/Reed will meet with: • Ann Ellis • Marie Anderson • Kim de Kruif • Otto Reyer • Nicholas Blank-Spadoni • Michelle Tadros • Lance McNaughton • Valerie Wren • Bob Lee Location: Harris Family Conference Room
4:15 pm	**Open Meeting with faculty—*No administrators to be present.*** Location: Classroom E	
5:15 pm	**Dinner with Site Team and student leaders.** OD 2013 • Joseph Lao • Katherine Gillett • Chrissy Hines • Abby Hsu • Brian Woolford OD2014 • Liz Suh • Wallace Wong • Judy Cao • Thomas Wong	

	OD2015 • Alex Tadros • Aaron Peterson • Mary Hoang • Aaron Lam Location: HEC – 2nd Floor Faculty Lounge
6:30 pm	Hotel shuttle will pick up team to return to hotel. (Shuttle will only schedule pick ups on the hour and half hour.) Dr. Reed will announce the schedule for the team meeting in the **Syrah Room** on Monday evening.

Tuesday April 24

7:30 am	**Depart from Sheraton (transportation for Drs. Reed/Vollmer and Scharre provided by Drs. Hoppe and/or Dr. Drescher)**	
8 am	**Dr. Kershenstein and Ms. Wirth will travel via hotel shuttle to the College and conduct document review, conduct other interviews which may be needed, or work on individual assignments until the 10 a.m. meetings.** **Location: HEC – Magnocellular Conference Room**	
8:30am	**External Site Visit** Drs. Reed/Vollmer/Scharre will ride with Drs. Hoppe and/or Drescher to external site. Location: Kaiser Fontana Medical Center with Drs. Kresten Pedersen and Judy Fan	
9 am	**Travel from Kaiser Fontana to the College.**	
10 am	**Standard 7 Facilities, Equipment and Resources** Drs. Kershenstein/Reed will meet with: • Paul Dobies • Jason Shen • Frances Chu • Rudy Barreras • Frank Spors • Denise Wilcox • Miki Carpenter Location: LRC – 4th Floor Conference Room	**Standard 5 Faculty** Drs. Vollmer/Scharre will meet with: • Daniel Kurtz • Tiffenie Harris • Valerie Wren • Donald Egan • Maryke Neiberg Location: HEC – 3rd Floor Conference Room
11 am	**Standard 4 Finances** Drs. Kershenstein/Scharre will meet with: • Elizabeth Hoppe • Kevin Shaw • Lori Rees • Miki Carpenter Location: Business Center Conference Room	Other team members will conduct follow-up interviews as needed or private interviews if requested or work on individual assignments. Location: HEC – Magnocellular Conference Room
Noon	**Team meeting and lunch** (Team will begin preparing for the exit interview and determine if any follow-up information/interviews are needed.)	
1 pm	**Team Meeting with University President/Provost/Central Administration** • Philip Pumerantz • Gary Gugelchuk Location: Warren Lawless Conference Room	
2 pm	**Team meeting in executive session to prepare for the Exit Interview.**	

4 pm	**Exit Interview (Program/University attendees to be designated by the Dean.)** • Philip Pumerantz • Gary Gugelchuk • Elizabeth Hoppe • Robert Gordon • Daniel Kurtz • Ann Ellis • Lori Rees • Miki Carpenter • Rob Drescher • Raymond Maeda Location: Warren Lawless Conference Room
5 pm	**Visit ends. Hotel shuttle picks up Team for return to hotel.**

List of University and College Participants

University Officials:

Philip Pumerantz, Ph.D.	President of the University
Gary Gugelchuk, Ph.D.	Provost, Chief Operating Officer
Kevin Shaw, B.S.	Chief Financial Officer, Treasurer
Otto Reyer, M.A.	Director of Financial Aid and Special Assistant to the President
Denise Wilcox, M.S.I.T.	Executive Director of Information Technology
Marie Anderson	Director of Admissions - College of Optometry, Podiatry, Dental Medicine
Kimberley de Kruif, M.B.A.	Assistant Vice President of University Enrollment Management, University Registrar
Nicholas Blank-Spadoni, M.A.	Learning Skills Specialist
Michelle Tadros	University Recruiter
Frances Chu, M.S., B.S.	Assistant Director of Reference and Outreach
Rudy Barreras	Reference Librarian, Marketing & Outreach Coordinator, Library Liaison

College of Optometry Officials

Elizabeth Hoppe, O.D., M.P.H., Dr.P.H.	Founding Dean
Daniel Kurtz, Ph.D., O.D.	Associate Dean of Academic Affairs
Robert Gordon, O.D.	Associate Dean of Clinical Affairs
Ann Ellis, M.Ed	Assistant Dean of Student Affairs
Robin Drescher, O.D., M.S.	Director of Clinical Education
Miki Carpenter, M.P.H, Ph.D.	Director of Program Assessment and Development
Raymond Maeda, O.D.	Chief of Optometric Staff, Associate Professor
Joanne Davis, B.S.	Director of Patient Care Services
Keith Miller	Director of Clinic Operations
Lori Rees	Manager of Operations
Joshua Cameron, Ph.D.	Assistant Professor
Chris Chase, Ph.D.	Professor

Chunming Liu, O.D., Ph.D., M.D.	Assistant Professor
Jason (Jie) Shen, M.D., Ph.D.	Assistant Professor
Kristy Remick-Waltman, O.D.	Director of Community Outreach, Assistant Professor
Efrain Castellanos, O.D., M.S.	Assistant Professor
Robert Lee, O.D.	Associate Professor
Maryke Neiberg, O.D.	Associate Professor
Tiffenie Harris, O.D.	Associate Professor
James Rogala, O.D.	Associate Professor
Kierstyn Napier-Dovorany, O.D.	Assistant Professor
David Todd, O.D.	Assistant Professor
Donald Egan, O.D.	Associate Professor
Frank Spors, EuroOptom, M.S., Ph.D	Assistant Professor
Diego (Gang) Zhao	Optician
Dorcas Tsang, O.D.	Assistant Professor
Jasmine Yumori, O.D.	Assistant Professor
Lance McNaughton, O.D., Ph.D.	Chief of Contact Lens Services, Assistant Professor
Paul Dobies, O.D., B.S.	Assistant Professor
Pinakin Gunvant Davey, Ph.D, O.D.	Associate Professor
Valerie Wren, O.D.	Chief of Neuro-Optometric Rehabilitation, Associate Professor
Bennett McAllister, O.D.	Chief of Primary Care Optometry, Assistant Professor
Stuart Mann, O.D., M.A.	Chief of Pediatric Services, Assistant Professor
Kristi Jensen, O.D.	Chief of Vision Therapy Services, Assistant Professor
Kimberly Walker, O.D.	Assistant Professor

CALIFORNIA STATE BOARD OF OPTOMETRY

Memo

2450 Del Paso Road, Suite 105
Sacramento, CA 95834
(916) 575-7170, (916) 575-7292 Fax
www.optometry.ca.gov

To: Board Members **Date:** May 18, 2012

From: Mona Maggio.
Executive Officer **Telephone:** (916) 575-7176

Subject: **Agenda Item 6 – Executive Officers Report**

Department of Consumer Affairs – New Member to the Executive Team

Tracy Rhine, Deputy Director, Legislative and Policy Review Division - Tracy was appointed in March, 2012, having previously served as the Assistant Executive Officer for the Board of Behavioral Sciences. Prior to coming to the Department, Tracy served as a consultant to the California State Assembly Committee on Business, Professions and Consumer Protection from 2005 to 2008 and as a consultant to the Speaker's Office of Member Services from 2002 to 2005. She was a graduate research assistant in the Governor's Office of Innovation in 2002 and a program coordinator at Changing Courses from 1988 to 2001.

Board Members

Mona Maggio met with Terry Holloman, Deputy Director of Appointments, Office of the Governor on February 7, 2012 and with Reichel Everhart, Deputy Director Board/Bureau Relations, Department of Consumer Affairs on February 21, 2012, to discuss the current and pending vacancies on the Board. As of May 14, 2012, there has been no word on appointments to the Board of Optometry (Board).

The Board consists of 11 members, five of whom shall be public members. (BPC section 3010.5)

Name	Appointment Authority	Date(s) of Appointment Initial	Reappointment	Expiration of Term
Dr. Lee Goldstein, OD	Professional - Governor	04/2003	11/01/2007	06/01/2011
Dr. Alejandro Arredondo, OD	Professional - Governor	11/01/2007		06/01/2011
Monica Johnson	Public - Governor	12/2005	05/25/2010	06/01/2013
Dr. Kenneth Lawenda, OD	Professional - Governor	11/2007	12/22/2010	06/01/2014
Fred Naranjo, MBA	Public - Governor	04/2003	11/01/2007	06/01/2011
Donna Burke	Public - Senate Rules	10/07/2010	06/01/2011	06/01/2015
Edward Rendon, MA	Public - Assembly	01/06/2009		06/01/2011
Alexander C. Kim	Public - Governor	12/27/2010		06/01/2014
Vacant (06/01/2009)	Professional - Governor			
Vacant (06/01/2009)	Professional - Governor			
Vacant (06/01/2010)	Professional - Governor			

Board Staffing

New Employees

Christina Hasting has accepted the Staff Services Analyst (SSA) (General) position in the Enforcement Program effective, May 14, 2012. Christina has a Bachelor of Arts Degree in Communications from

California State University, Sacramento. She previously served as a SSA with the Employment Development Department and most recently as a customer service specialist with Ameripride. Christina brings a wealth of knowledge, skills, and ability to the Board and will be a valuable member of our team.

Departures
No departures to report at this time.

Vacancies
The Board has been working diligently with the Department of Consumer Affairs, Office of Human Resources in an effort to establish a full-time permanent office technician position in the Enforcement Program. Currently the Board has a limited term office technician (OT) position that expires on August 12, 2012. The Board's Budget Change Proposal (BCP) for Fiscal Year 2011/12 to authorize a permanent full-time OT position was denied by the Department of Finance in July 2011. The OT position is essential to ensure that the Board addresses the increasing workload in the Enforcement Program in an efficient and timely manner, and that statutorily mandated requirements as well as the Consumer Protection Enforcement Initiative Performance Measures set by DCA and adopted by the Board, will continue to be met. In addition to complaint case handling and supporting the Enforcement Analysts, the OT handles statutory mandated requirements. This workload cannot be absorbed by current staff, so without this position, it is unknown how we will meet the requirements.

Budget
Representatives from the Department of Consumer Affairs Budget Office will present the Budget Report. The Board's Budget for fiscal year 2011-12 is $1,554,425. Expenditures as of January 31, 2012 are $794,342, or 51% of the budget. The projected fiscal year end surplus is $121,248 or 7.8%. The analysis of the Board's fund condition reveals 4.3 months reserve in the current year and 3.9 months in Fiscal Year 2012-13.

In response to California's budget shortfalls, loans from special fund agencies to the General Fund (GF) have been part of the solution. In 2010/2011 the Board loaned the GF $1 million dollars. In order to be repaid, the Board would have to request repayment and show a need for the funds to be repaid.

Budget Letter (BL)
On March 12, 2012, the Board received Budget Letter 12-03 which provided direction to departments to make necessary adjustments to accurately reflect budget expenditures and positions for a more transparent budget. Essentially, we were required to identify vacant positions to be eliminated for salary savings. In previous years, we were allowed to use funds to cover the costs of salary savings but now we are forced to eliminate the positions. For the Board this amounts to 0.6 of a position.

Budget Letter (BL) 12-05 provides guidance for submitting Out of State Travel (OST) Blanket requests. The OST blanket will now be submitted in two separate components. The first component of the OST blanket will include only those requests which meet specific mission critical criteria (referenced below). The second component will include those requests which are discretionary, but which our State and Consumer Services Agency (SCSA) believes represents a benefit to the state and should be considered for approval by the Governor's office.

Mission critical criteria:

- Enforcement responsibilities
- Auditing
- Revenue collection
- A function required by statute, contract or executive directive
- Job-required training necessary to maintain licensure or similar standards required for holding a position
- Equipment inspection as required by a contract
- Meetings or training required by a grant or to maintain grant funding

- Litigation related (depositions, discovery, testimony)
- Requests by the Federal Government to appear before committees

Mission critical does not mean travel to attend:

- Conferences, meetings or seminars (even those that historically have been attended or if a request has been made for your department or an individual to make a presentation)
- Networking opportunities
- Professional development courses
- Continuing education classes/seminars

On May 4, 2012, the Department of Finance (Finance) issued BL 12-06 the 2013-14 budget process. This technical BL contains budget preparation instructions, and relevant instructions for the preparation of regular Budget Change Proposals (BCPs). Staff will be submitting three concept papers for DCA Budget Office's consideration. Two BCPs for additional personnel and one for an increase in funding to pay OE&E.

BreEZe

The BreEZe Project will allow DCA licensees to apply for, renew, pay, and track their licensing requests online. Additionally, it will dramatically increase the capabilities of the DCA boards, bureaus, and oversight programs to isolate unscrupulous practitioners and empower California consumers to make more informed decisions when they hire licensees.

Board staff is still very involved in the development of BreEZe discussions/pilots for Phase I boards/bureaus and configuration discussions for preparation for what actions we will need to take for our Board's transition.

California E-mail Services

DCA boards/bureaus participated with the migrations to California E-mail Services (CES). We have experienced a number of problems with emails since the migration, i.e., missing e-mails, deletions of e-mails, e-mails not being delivered, e-mail addresses in "contacts" not working, delays in e-mail being processed. OIS staff has been assisting us with these problems.

Licensing Statistics

Jeff Robinson will report on the Licensing Program and provide statistics at the meeting.

Sunset Review

The Board Sunset Review cycle begins 2012/13, with a Sunset Date of January 1, 2014, (Business and Professions Code Sections 3010.5, 3014.6). The completed report is due to the legislature in September 2012.

Attachments

1) Board of Optometry Expenditure Report
2) Board of Optometry Analysis of Fund Condition
3) DCA Boards and Bureaus" Sunset Dates and Review Cycles
4) 2002 Sunset Review Report submitted to the Joint Legislative Review Committee
5) Memorandum from Senator Curren D. Price Jr. Sunset Overview
6) 2012 BPED Oversight Report Form

BOARD OF OPTOMETRY - 0763
BUDGET REPORT
FY 2011-12 EXPENDITURE PROJECTION

March 31, 2012

OBJECT DESCRIPTION	FY 2010-11 ACTUAL EXPENDITURES (MONTH 13)	FY 2010-11 PRIOR YEAR EXPENDITURES 3/31/2011	FY 2011-12 BUDGET STONE 2011-12	FY 2011-12 CURRENT YEAR EXPENDITURES 3/31/2012	FY 2011-12 PERCENT SPENT	FY 2011-12 PROJECTIONS TO YEAR END	FY 2011-12 UNENCUMBERED BALANCE
PERSONNEL SERVICES							
Salary & Wages (Staff)	369,139	282,163	**459,572**	255,276	56%	**383,309**	76,263
Statutory Exempt (EO)	76,385	56,896	**80,347**	60,040	75%	**80,473**	(126)
Temp Help Reg (Seasonals)	53,541	38,542	**3,628**	30,719	847%	**43,726**	(40,098)
Temp Help (Exam Proctors)							0
Board Member Per Diem	4,800	3,100	**7,353**	1,900	26%	**3,200**	4,153
Committee Members (DEC)							0
Overtime							0
Staff Benefits	203,802	161,601	**255,446**	139,384	55%	**209,292**	46,154
Salary Savings		0	**(17,974)**		0%		(17,974)
TOTALS, PERSONNEL SVC	707,667	542,302	**788,372**	**487,319**	**62%**	**720,000**	68,372
OPERATING EXPENSE AND EQUIPMENT							
General Expense	11,041	10,017	**418**	10,636	2544%	**12,000**	(11,582)
Fingerprint Reports	6,451	2,830	**5,306**	5,202	98%	**9,000**	(3,694)
Minor Equipment	707	707	**1,800**	0	0%	**800**	1,000
Printing	7,783	7,339	**7,852**	4,549	58%	**7,400**	452
Communication	5,016	2,920	**6,116**	3,153	52%	**4,300**	1,816
Postage	16,289	12,504	**16,381**	10,166	62%	**15,500**	881
Insurance			**0**				0
Travel In State	18,842	10,159	**27,314**	15,079	55%	**22,000**	5,314
Travel, Out-of-State			**0**				0
Training	1,210	890	**1,099**	1,790	163%	**3,000**	(1,901)
Facilities Operations	62,591	62,223	**58,676**	112,555	192%	**112,555**	(53,879)
Utilities			**0**				0
C & P Services - Interdept.	9,576	9,576	**2,943**	14,772	502%	**14,772**	(11,829)
C & P Services - External			**0**	48,647		**48,647**	(48,647)
DEPARTMENTAL SERVICES:							
Departmental Pro Rata	78,415	59,974	**87,958**	67,193	76%	**87,958**	0
Admin/Exec	99,951	74,898	**101,357**	73,109	72%	**101,357**	0
Interagency Services	0	0	**146**	0	0%	**0**	146
IA w/ OER	21,864	21,864	**0**	27,720		**27,720**	(27,720)
DOI-ProRata Internal	3,397	2,851	**4,017**	3,014	75%	**4,017**	0
Public Affairs Office	7,221	5,787	**6,821**	5,115	75%	**6,821**	0
CCED	4,695	3,519	**4,871**	5,338	110%	**4,871**	0
INTERAGENCY SERVICES:							0
Consolidated Data Center	1,356	7,000	**31,639**	574	2%	**1,000**	30,639
DP Maintenance & Supply	4,983	98	**1,009**	115	11%	**1,000**	9
Central Admin Svc-ProRata	60,194	45,146	**77,237**	57,928	75%	**77,237**	0
EXAM EXPENSES:							0
Exam Supplies			**0**				0
Exam Freight	0	0	**484**	0	0%	**0**	484
Exam Site Rental							0
C/P Svcs-External Expert Administrative		150		150		**150**	(150)
C/P Svcs-External Expert Examiners	0	0	**25,703**	0	0%		25,703
C/P Svcs-External Subject Matter	15,354	4,475		15,232		**15,232**	(15,232)
ENFORCEMENT:							0
Attorney General	209,968	124,030	**229,055**	74,870	33%	**154,000**	75,055
Office Admin. Hearings	27,050	18,595	**37,930**	9,348	25%	**28,000**	9,930
Court Reporters	1,158	533		436		**1,000**	(1,000)
Evidence/Witness Fees	17,234	13,979	**35,921**	2,178	6%	**7,000**	28,921
DOI - Investigations			**0**			**0**	0
Major Equipment	0	0	**0**			**0**	0
Special Items of Expense							0
Other (Vehicle Operations)							0
TOTALS, OE&E	692,346	502,064	**772,053**	568,869	74%	767,337	4,716
TOTAL EXPENSE	1,400,013	1,044,366	**1,560,425**	1,056,188	135%	**1,487,337**	73,088
Reimb. - State Optometry Fund				(1,200)	#DIV/0!		0
Sched. Reimb. - Fingerprints	(6,834)	(3,876)	**(6,000)**	(6,763)	113%	**(6,000)**	0
Sched. Reimb. - Other	(4,780)	(3,125)		(3,565)			0
Unsched. Reimb. - Investigative Cost Recover	(31,332)	(27,451)		(31,478)			0
Unsched. Reimb. - ICR - Prob Monitor	(100)			(1,247)			0
NET APPROPRIATION	1,356,967	1,009,914	**1,554,425**	1,011,935	65%	**1,481,337**	**73,088**
						SURPLUS/(DEFICIT):	**4.7%**

0763 - State Board of Optometry
Analysis of Fund Condition

Prepared 5/9/12

(Dollars in Thousands)

NOTE: $1 Million Dollar General Fund Repayment Outstanding

BY 12-13 Governor's Budget

		Actual 2010-11	CY 2011-12	Governor's Budget BY 2012-13
BEGINNING BALANCE		$ 1,218	$ 1,514	$ 617
Prior Year Adjustment		$ 8	$ -	
Adjusted Beginning Balance		$ 1,226	$ 1,514	$ 617
REVENUES AND TRANSFERS				
Revenues:				
125600	Other regulatory fees	$ 17	$ 20	$ 20
125700	Other regulatory licenses and permits	$ 115	$ 120	$ 131
125800	Renewal fees	$ 1,497	$ 1,496	$ 1,501
125900	Delinquent fees	$ 9	$ 9	$ 10
141200	Sales of documents	$ -	$ -	$ -
142500	Miscellaneous services to the public	$ -	$ -	$ -
150300	Income from surplus money investments	$ 7	$ 16	$ 6
160400	Sale of fixed assets	$ -	$ -	$ -
161000	Escheat of unclaimed checks and warrants	$ -	$ -	$ -
161400	Miscellaneous revenues	$ 3	$ 3	$ 3
Totals, Revenues		$ 1,648	$ 1,664	$ 1,671
Transfers from Other Funds				
	Proposed GF Loan Repayment	$ -	$ -	$ -
Transfers to Other Funds				
	Proposed GF Loan	$ -	$ -1,000	$ -
	Totals, Revenues and Transfers	$ 1,648	$ 664	$ 1,671
	Totals, Resources	$ 2,874	$ 2,178	$ 2,288
EXPENDITURES				
Disbursements:				
0840 State Controller (State Operations)		$ 2	$ 2	
8880 Financial Information System for CA (State Operations)		$ 1	$ 5	$ 3
1110 Program Expenditures (State Operations)		$ 1,357	$ 1,554	$ 1,714
Total Disbursements		$ 1,360	$ 1,561	$ 1,717
FUND BALANCE				
Reserve for economic uncertainties		$ 1,514	$ 617	$ 571
Months in Reserve		11.6	4.3	3.9

NOTES:

A. ASSUMES WORKLOAD AND REVENUE PROJECTIONS ARE REALIZED

B. INTEREST ON FUND ESTIMATED AT 1%

C. ASSUMES APPROPRIATION GROWTH OF 2% IN FY12-13 AND ONGOING

DCA Boards and Bureaus: Sunset Dates and Review Cycles

Board	(BPC Code Sections)	Sunset Dates	Review Cycle	Last Reviewed
Accountancy, Board of	(5000, 5015.6)	1/1/16	2014/15	2010/11
Acupuncture Board	(4928, 4934)	1/1/13	2011/12	2004/05
Architects Board, California	(5510, 5517)	1/1/16	2014/15	2010/11
Landscape Architects Technical Committee	(5620, 5621, 5622)	1/1/16	2014/15	2010/11
Automotive Repair, Bureau of	(9882)	None	2013/14	2003/04 (2005/06 monitor report)
Athletic Commission	(18602, 18613)	1/1/14	2012/13	2010/11
Board of Barbering and Cosmetology	(7303)	1/1/14	2012/13	2005/06
Behavioral Sciences, Board of	(4990, 4990.4)	1/1/13	2011/12	2004/05
Cemetery and Funeral Bureau	(7602)	None	2013/14	2004/05
Chiropractic Board	(1000 & Chiropractic Act of 1922)	None	2011/12	2005/06
Common Interest Development Managers	(11506)	1/1/15	2013/14	Never reviewed (New)
Contractors State License Board	(7000.5, 7011)	1/1/16	2014/15	2010/11
Court Reporters Board	(8000, 8005, 8030.2, 8030.4, 8030.5, 8030.6, 8030.8)	1/1/13	2011/12	2004/05
Dental Hygiene Committee of California	(1901, 1903)	1/1/15	2013/14	2003/04
Dental Board of California	(1601.1, 1616.5)	1/1/16	2014/15	2010/11
Electronic and Appliance Repair, Home Furnishings and Thermal Insulation	(9810, 19030)	None	2013/14	Never reviewed
Engineers, Land Surveyors & Geologists	(6710, 6714, 8710)	1/1/16	2014/15	2010/11
Guide Dogs for the Blind, Board of	(7200, 7215.6)	1/1/14	2012/13	2000/01
Interior Design, Certification Organization	(5810)	1/1/14	2012/13	2002/03
Massage Therapists Organization	(4620)	1/1/15	2013/14	Never reviewed (New)
Medical Board of California	(2001, 2020)	1/1/14	2012/13	2004/05
Occupational Therapy, California Board of	(2570.19)	1/1/14	2012/13	2005/06

Updated: November 2011

Board	(BPC Code Sections)	Sunset Dates	Review Cycle	Last Reviewed
Optometry, Board of	(3010.5, 3014.6)	1/1/14	2012/13	2001/02
Osteopathic Medical Board of California	(2450 & Osteopathic Act)	None	2012/13	2004/05
Naturopathic Medicine Committee	(2450.3, 3685, 3686)	1/1/13, 1/1/14	2012/13	Never reviewed (New)
Pharmacy, Board of	(4001, 4003)	1/1/13	2011/12	2002/03
Physical Therapy Board of California	(2602, 2607.5)	7/1/13 & 1/1/14	2011/12	2005/06
Physician Assistant Committee	(3504, 3512)	7/1/13	2011/12	2001/02
Podiatric Medicine, Board of	(2460)	1/1/13	2011/12	2001/02
Private Postsecondary Education, Bureau of	(Education Code 94874.1, 94950)	1/1/15, 1/1/16	2013/14	2005/06
Professional Fiduciaries Bureau	(6510)	1/1/15	2013/14	2010/11
Psychology, Board of	(2920, 2933)	1/1/13	2011/12	2004/05
Registered Dispensing Opticians (with Med Board)	(2569)	1/1/14	2012/13	2004/05
Registered Nursing, Board of	(2701, 2708)	1/1/12	2010/11	2010/11
Respiratory Care Board	(3710, 3716)	1/1/14	2012/13	2001/02
Security and Investigative Services, Bureau of	(7501)	None	2013/14	Never reviewed
Speech-Language Pathology, Audiology & Hearing Aid Dispensers Board	(2531, 2531.75)	1/1/14	2012/13	1998
Structural Pest Control Board	(8520, 8528)	1/1/15	2013/14	2004/05
Tax Preparer Education Council	(22259)	1/1/15	2013/14	2003/04
Veterinary Medical Board	(4800, 4804.5)	1/1/14	2012/13	2003/04
Vocational Nursing and Psychiatric Technicians, Board of	(2841, 2847, 4501, 4503)	1/1/16	2014/15	2010/11

KEY: Blue = 2011/12 sunset review (Sunset Date – January 1, 2013)
Black = 2012/13 sunset review (Sunset Date – January 1, 2014)
Green = 2013/14 sunset review (Sunset Date – January 1, 2015)
Red = 2014/15 sunset review (Sunset Date – January 1, 2016)

Updated: November 2011

DCA Boards and Bureaus Sunset Dates for Review

2011/2012	2012/2013	2013/14	2014/2015
Acupuncture Board	Athletic Commission	Automotive Repair, Bureau of	Accountancy Board
Behavioral Sciences Board	Barbering and Cosmetology Board	Cemetery and Funeral Bureau	Architects Board Landscape Architects Technical Committee
Chiropractic Board	Guide Dogs for the Blind	Common Interest Development Managers	Contractors State License Board
Court Reporters Board	Interior Design Certification Organization	Dental Hygiene Committee	Dental Board
Pharmacy Board	Medical Board of California	Electronic, Appliance Repair, Home Furnishings and Thermal Insulation Bureau	Engineers, Land Surveyors and Geologists
Physical Therapy Board	Occupational Therapy Board	Massage Therapist Organization	Registered Nursing Board
Physician Assistant Committee	Optometry Board	Private Postsecondary Education Bureau	Vocational Nursing and Psychiatric Technicians Board
Podiatric Medicine Board	Osteopathic Medical Board	Professional Fiduciaries Bureau	
Psychology Board	Naturopathic Medicine Committee	Security and Investigative Services Bureau	
	Registered Dispensing Opticians	Structural Pest Control Board	
	Respiratory Care Board	Tax Preparer Education Council	
	Speech-Language Pathology, Audiology, Hearing Aid Dispensers Board		
	Veterinary Medical Board		

Updated: November 2011

BOARD OF OPTOMETRY

JOINT LEGISLATIVE SUNSET REVIEW COMMITTEE
2002 SUNSET REVIEW REPORT

Four Year Overview of the Board's Regulatory Program, Board's Response to Issues and Recommendations from Previous Sunset Review, Background Paper for the 2001 Public Hearing, and Final Recommendations of the Joint Committee and the Department of Consumer Affairs

---

Senator Liz Figueroa
Chair

Senate Members
Maurice Johannessen
Richard Polanco

Assembly Members
Lou Correa, Vice Chair
Sam Aanestad
Helen Thompson

Staff:
Robin Hartley, Consultant
Jennifer Anderson, Assistant

Staff Assistance Provided By:

Bill Gage, Consultant
Senate Business and Professions Committee

Jay DeFuria, Consultant
Senate Business and Professions Committee

Kristin Triepke, Consultant
Senate Business and Professions Committee

TABLE OF CONTENTS

PART 1. BACKGROUND INFORMATION AND FOUR YEAR OVERVIEW OF THE CURRENT REGULATORY PROGRAM 3

PART 2. BOARD'S RESPONSE TO ISSUES IDENTIFIED AND FORMER RECOMMENDATIONS MADE BY THE JOINT LEGISLATIVE SUNSET REVIEW COMMITTEE 27

PART 3. BACKGROUND PAPER FOR THE 2002 HEARING 30

PART 4. FINAL RECOMMENDATIONS OF THE JOINT LEGISLATIVE SUNSET REVIEW COMMITTEE AND THE DEPARTMENT OF CONSUMER AFFAIRS 43

1.

OVERVIEW OF THE CURRENT REGULATORY PROGRAM

A. BACKGROUND AND DESCRIPTION OF THE BOARD AND PROFESSION

This section reviews the history and authority of the Board, and its present organization, staffing, and operations. It discusses the purpose and composition of the nine-member Board, committees of the Board, and the administrative office staffing and responsibilities. The operational functions and activities of the Board and its administrative office are also discussed.

History and Function of the Board

On March 20, 1903, California became the third state to pass a law recognizing the profession of optometry, and regulating its practice[1]. In 1913, a new Optometry Practice Act[2] was enacted creating the California State Board of Optometry, defining its duties and powers, and prescribing a penalty for a violation of the Act. The Act of 1913 was later incorporated in the Business and Professions Code[3]. Empowered with rule-making authority[4], the Board promulgated the first rules for the practice of optometry in 1923. In the same year the legislature passed a law[5] requiring all applicants for licensure to meet certain educational requirements, i.e., graduate of an accredited school or college of optometry. The Board was charged with the responsibility for accrediting these schools. Prior to this time individuals desiring to practice were not required to have any specific formal education.

Because incompetent or unethical practitioners pose the threat of immediate, extreme, and possibly irreparable harm to the public, no person may engage in the practice of optometry in California unless he or she possesses a valid and unrevoked license from the Board of Optometry. In order to become licensed, applicants must first meet the minimum requirements, as determined by the Board. All requirements are based on a demonstrated need for assuring competency for safe practice, and thereby reducing the public's risk of harm. With approximately 7700 Optometrists and 400 Optometric Corporations, the largest population of optometrists in the United States, the Board is charged with the following duties and responsibilities:

---

[1] Optometry Act of 1903 (California Statutes of 1903, Chapter CCXXXIV) later repealed by Statutes of 1913, Chapter 598.
[2] Statutes of 1913, Chapter 598 (derived from the 1903 Act as amended by enactments of 1907 and 1908)
[3] Chapter 7, Division 2 (healing Arts), Business and Professions Code (B&P)
[4] B&P Sections 3025 and 3025.5
[5] Chapter 164, Statutes of 1923

- Accrediting schools and colleges providing optometric education.

- Establishing educational requirements for admission to the examination for certificates of registration as California licensed optometrists.

- Establishing examination requirements to ensure the competence of individuals licensed to practice optometry in California and administering the examination.

- Setting and enforcing standards for continued competency of existing licensees.

- Establishing educational and examination requirements for licensed optometrists seeking certification to use and prescribe certain pharmaceutical agents.

- Licensing branch offices, registering optometric corporations and issuing fictitious name permits

- Promulgating regulations governing:

  Procedures of the Board

  Admission of applicants for examination for certificates of registration as optometrist.

  Minimum standards of optometric services offered or performed, the equipment, or sanitary conditions, in all offices for the practice of optometry.

- Providing for redress of grievances against licensees by investigating allegations of substance and patient abuse, unprofessional conduct, incompetence, fraudulent action, unlawful activity

- Instituting disciplinary action for violations of laws and regulations governing the practice of optometry when warranted

For nearly a century the Board has presided over the optometric profession serving in a quasi-legislative (rulemaking) and judicial (disciplinary) capacity. As the practice of optometry, once a mercantile business, was redefined as a learned profession providing primary vision care to the public, the Board responded by establishing minimum standards commensurate with the optometric scope of practice. While California has seen a great evolution in the practice of optometry during the past century, the Board's main purpose has remained unchanged, "protecting the health, safety and welfare of California's consumers of vision care."

Regulatory Structure

The Board of Optometry is one of several autonomous regulatory Boards under the Department of Consumer Affairs (DCA), and funding of its operations is derived entirely by the regulated profession (optometry) through licensing fees. The Board functions independently in the regulation of optometry with general support and oversight from the DCA. The present regulatory structure incorporates the efficiencies associated with the centralization of common Board functions where possible, with the independence necessary to enable quick responses to public needs by an independent Board not subject to numerous layers of bureaucratic review and approval.

Board Composition

The Board of Optometry consists of nine members and is vested with the enforcement of the Optometry Practice Act.[6] Members of the Board, except public members, must be appointed from persons who are registered optometrists of the State of California and actually engaged in the practice of optometry at the time of appointment or who are faculty of a school of optometry. However, in the case of faculty members, no more than two faculty members may be on the Board at any one time and they may not serve as public members. The public members shall not be licentiates of the Board or of any other Healing Arts Board under Division 2.

No person, including the public members, is eligible to serve as a member of the Board who is a stockholder in or owner of or member of the board of trustees of any school of optometry or who has a financial interest, directly or indirectly, in the manufacturing or dealing in optical supplies at wholesale. Board members cannot serve more than two consecutive terms.[7]

Each Board member is a appointed to a four year term, and serves until the appointment of his or her successor or until one year has elapsed since the expiration of the member's term, whichever occurs first. The Governor appoints the six members who are practicing optometrists and one public member. The Senate Rules Committee and the Speaker of the Assembly each appoint one public member. [8] The Governor may remove any member appointed by him for continued neglect of duties, incompetence, or unprofessional or dishonorable conduct.[9] At this time, there are three vacancies on the Board. All three vacancies are professional members, appointed by the Governor. One position has been vacant as of June 1, 2000, and the other two since June 1, 2001.

The Board employs an Executive Officer to carry out its policies and directives, and manage the day-to-day operations with general Board oversight. The Executive Officer is supported by a staffing complement of 6 permanent full-time positions. All staff is located at the Board's office in Sacramento.
An organization chart is provided in Appendix A–I. To the extent possible, and given the Board's limited number of positions, staff functions have been delineated to reflect enforcement, licensing, examination, and administrative workload activities.

Board Officers

The Board elects from its membership a President, Vice President, and Secretary each of whom serve a term of office of one (1) year or until the election and qualification of a successor[10]. Each officer holds the following responsibilities:

A. President

1. Preside at all Board meetings.

[6] B&P Section 3010
[7] B&P Section 3011
[8] B&P Section 3013
[9] B&P Section 106
[10] B&P Section 3014

2. Appoint all committee members, standing and ad hoc.

3. Represent the Board at all public meetings or designate a member or the Executive Officer to do so.

4. Maintain a close working relationship with the Executive Officer, providing guidance as needed in the performance of his/her duties.

5. Prepare the final meeting agendas with the assistance of the Executive Officer.

6. Act as the official spokesperson for the Board.

7. Perform an annual review of the Executive Officer's performance with full Board input.

8. Act as the liaison between the Board office and the Board .

9. Perform other duties as requested by the Board.

B. Vice President

1. Assume duties and responsibilities of the President in his/her absence.

2. Perform other duties as requested by the President or the Board.

C. Secretary

1. Ensure that the general minutes of the Board meeting are prepared in a timely manner.

2. Review final minutes for accuracy before being signed by the President, Secretary, and the Executive Officer.

3. Assist the President and Executive Officer with agenda preparation.

4. Perform other duties as requested by the President or the Board.

New Members

Shortly after appointment to the Board, all new members visit the Board office and meet with the Board's executive officer who provides an overview of Board policy and procedures, and guidance regarding the duties and legal responsibilities of members. New members receive Board minutes to review in order to become familiar with current Board issues. Additionally, new members are strongly encouraged to attend the first Department of Consumer Affairs New Board Member Orientation meeting held after his/her appointment.

A Board adopted policy manual (see Appendix A-II) governs the conduct and procedures of the Board and its members. Upon original appointment to the Board each new member is given a copy of the manual which outlines the roles and responsibilities of members, describes the

purpose and duties of Board committees, and states the Board's policy on matters such as conflict of interest, sexual harassment, employment of staff, etc.

Board Meetings

The Board holds four regularly scheduled meetings each year. Typically, these meetings are held in February, May, August and November. The meetings are held in Sacramento, Los Angeles (Orange County), San Francisco or San Diego and are conducted in accordance with the Bagley-Keene Open Meetings Act.[11] All meetings are duly noticed as to date, time and location, and a copy of the agenda is mailed to all those appearing on the Board's mailing list, currently comprised of about 100 individuals and organizations. Interested parties are added to the Board's mailing list upon request.

Board meetings are held for the purpose of conducting the public's business and all members of the public are invited to comment on the issues before the Board. In addition to the notice and agenda, any individual or group, can request an agenda packet which contains copies of all public information and documents prepared for each Board meeting. A complete copy of the agenda packet is also available for public inspection at the meeting site.

The Board welcomes and encourages public participation at Board and committee meetings. The President and committee chairs actively solicit comments from members of the audience. A "Public Forum" is scheduled at a time certain at all Board meetings. This is an opportunity for any interested party to address the Board on any topic at a set time. By doing this members of the public who do not wish to attend the entire meeting will not have to wait for long periods of time to speak. Members of the public may also request that specific issues placed on the meeting agenda.

Committees

To assist in the performance of it duties, the Board has established eight standing committees, all of which function as working committees, assigned specific issues requiring special attention. Board committees meet, as needed, on a periodic basis throughout the year. The committees and their duties are as follows:

Executive Committee

The committee consists of the President and Immediate Past President and is responsible for addressing matters of Board policy and/or urgent issues arising between Board meetings; overseeing the administration of the Board's budget, ensuring that overall expenditures are consistent with Board policy and are in conformance with state guidelines and legal requirements; and promoting the Board's strategic plan.

Enforcement

The committee is responsible for monitoring the Board's enforcement activities, and recommending changes to policy, regulations or laws to enhance the Board's enforcement abilities.

[11] Government Code Section 11120

Licensing and Examination

The committee has the primary responsibility for overseeing the Board's examination and licensing process. The committee recruits and selects item writers and subject matter experts, reviews examination materials and procedures on an ongoing basis, recommending revisions, as necessary.

Continuing Education

The committee monitors the Board's Continuing Education program and the enforcement thereof, reviews and approves provider applications and continuing education courses, and proposes changes in policy or regulation for Board consideration and action.

Credentials

The committee provides guidance on matters related to professional credentials of both U.S. and foreign-trained optometrists.

Legislation

The committee is responsible for the initial study on Board proposed legislation; monitoring bills affecting the regulation of optometrists or the visual welfare of the consumer; and recommending positions on pending legislation for the Board consideration.

Regulation

With the assistance of the Executive Officer and/or staff the committee is responsible for reviewing the Board regulations on an ongoing basis and recommends changes for Board consideration and action. The committee monitors the regulation change process until approval by the Office of Administrative Law.

Public Relations

The committee's primary responsibility is providing information regarding consumer rights and the Board's role as a consumer protection agency and to establish and maintain relationships with the Board's various interest groups.

The Regulated Profession

Optometry is a licensed occupation, regulated by all fifty states and the District of Columbia. Doctors of optometry are independent primary health care providers who examine, diagnose, treat and manage diseases and disorders of the visual system, the eye and associated structures. Optometrists are highly educated and trained to diagnose disease and pathological conditions manifesting in the human eye, such as glaucoma and diabetic retinopathy.

Significant Changes

Legislative

As originally defined Optometry was a drugless profession[12]. However, legislation passed in 1976 significantly expanded the scope of practice for optometrists, allowing qualified optometrists the use of diagnostic pharmaceutical agents (DPAs).[13] The Board, with the advise

[12] See Section 2, Optometry Act of 1913, Chapter 598, Statutes of 1913
[13] B&P Section 3041 (amended by Stats. 1976, Ch. 418.)

and consent of the Division of Allied Health of the Board of Medical Quality Assurance (Medical Board of California), was charged with establishing the educational and examination requirements for DPA certification, and promulgating the DPA drug formulary.[14] Today, nearly all California licensees are DPA certified.

Senate Bill 668 (Chapter 13, 1996 Statutes) amended, for the second time, the scope of practice for optometrists. Under the new scope of practice[15], optometrists meeting strict educational and clinical training requirements are eligible for certification authorizing them to diagnose and treat certain diseases of the human eye or eyes, or any of its appendages. The Board was charged with implementing the new law's provisions for the issuance of therapeutic pharmaceutical agent (TPA) certification. To date, the Board has certified over 5,250 optometrists.

Last year Senate Bill 929 (Chapter 676, 2000 Statutes) again amended the scope of practice for optometrists. The new scope of practice[16] now includes the prevention, treatment, management, and rehabilitation of certain disorders and dysfunctions of the visual system and expanded the list of pharmaceutical agents that may be used and prescribed by optometrists. The new law specifies additional circumstances requiring collaboration between an optometrist and ophthalmologist, and adds to the educational and training requirements for the treatment of certain diseases and dysfunctions.

In addition to the expanded scope of optometric practice, SB 929 set forth additional duties that an assistant may perform under the direct responsibility and supervision of an optometrist[17]. Assistants in the office of an optometrist and acting under the direct responsibility of the optometrist may now perform tasks including history-taking, visual acuities, preliminary testing and clinical data-collecting duties.

"To meet the public's increasing need for accessible, affordable, quality health care, providers of health care must maximize the utilization of every health care worker and ensure appropriate delegation of responsibilities and tasks."[18] Delegation of duties by health care professionals has long been regarded as necessary for the purposes of efficiency and best utilization of skills. Currently there are 43 jurisdictions in which state statutes or optometry Board regulations permit the delegation of specific tasks and procedures to optometric assistants.

The Board will consider regulation proposals designed to provide adequate public protection by ensuring that the assignment of duties to an assistant are done in a safe and legal manner. Specifically, the proposals will include standards for ensuring that assistants possess the necessary knowledge and skills for performing the delegated tasks and procedures, and that appropriate supervision exists.

Strategic Planning

In 1989, the Board participated in a long-range planning and self-assessment workshop, at which time it developed a plan setting the direction for its program policy decisions. Since that time the Board has held three additional strategic planning sessions. The Board's current long-range plan focuses on proactive measures for consumer protection and serves as the guide

[14] B&P Section 3041.2 (added by Stats. 1976, Ch. 418)
[15] B&P Section 3041.3
[16] B&P Section 3041
[17] B&P Section 2544
[18] 1995 Position Paper of the National Council of State Board of Nursing

upon which Board policy decisions are made and the daily operations of the Board office are carried out.

Major Studies

Other than the recent occupational analysis (referenced later in this report), the Board has conducted no major studies during this period of review.

Licensing Data

It is the Board's policy to provide full disclosure of all information to the greatest extent allowed under the law. Those inquiring about an individual licensee can obtain the issue and expiration of the license, the school of graduation and the year graduated, scope certification, i.e. diagnostic, therapeutic, lacrimal and/or glaucoma certification, practice location(s), associated permits or registrations, e.g. fictitious name permit, branch office license, etc., and any complaint history or disciplinary action. The Board does not currently certify or recognize any certification of specialty practice in optometry.

Optometric licenses are renewed on the last day of the certificate holder's birth month every two years[19] and may be renewed in an active or inactive status[20]. There are approximately 7,744 licensed optometrists of the Board of Optometry for FY 2000/01. The following provides licensing data for the past four years:

LICENSING DATA FOR [PROFESSION]	FY 1997/98	FY 1998/99	FY 1999/00	FY 2000/01
Total Licensed	Total: 7432	Total: 539	Total: 7653	Total: 7744
California	4623	4716	4816	4829
Out-of-State	1192	1154	1105	1131
Inactive	1617	1669	1732	1784
Applications Received	Total: 331	Total: 355	Total: 300	Total: 316
Applications Denied	Total: 0	Total: 0	Total: 0	Total: 0
Licenses Issued	Total: 195	Total: 233	Total: 245	Total: 257
Renewals Issued	Total: 3908	Total: 2773	Total: 2938	Total: 2842
Statement of Issues Filed	Total: 0	Total: 1	Total: 1	Total: 0
Statement of Issues Withdrawn	Total: 0	Total: 1	Total: 0	Total: 0
Licenses Denied	Total: 0	Total: 0	Total: 1	Total: 0

OTHER PERMIT/CERTIFICATE CATEGORIES	FY 1997/98	FY 1998/99	FY 1999/00	FY 2000/01
Total Permit/Certificate (By Type)	Total: 4,506	Total: 5,157	Total: 6,014	Total: 6,899
Branch Office	377	377	379	380

[19] B&P 3146
[20] B&P 700, 701, 702, 703 & 704

Statement of Licensure	573	683	804	789
Optometric Corporation	398	408	418	434
Fictitious Name	764	787	705	816
Therapeutic Optometrist	2,394	2,902	3,708	4,480
Permit/Certificate Issued (By Type)	Total: 1,002	Total: 1,257	Total: 1,175	Total: 799
Branch Office	81	64	49	72
Statement of Licensure	267	266	248	296
Optometric Corporation	18	30	27	36
Fictitious Name	128	91	79	80
Therapeutic Optometrist	508	806	772	315
Renewals Issued (By Type)	Total: 1,455	Total: 1,461	Total: 1,496	Total: 1,509
Branch Office	354	343	355	349
Statement of Licensure*	n/a	n/a	n/a	n/a
Optometric Corporation	384	387	389	396
Fictitious Name	717	731	752	764
Therapeutic Optometrist**	n/a	n/a	n/a	n/a
*** Permit does not require renewal**				
**** Board does not track renewal by status type**				

B. BUDGET

Revenue and Expenditures

The Board of Optometry is a special fund agency and is supported entirely by application, licensing, and permit fees. The Board's main source of revenue is derived from renewal fees. The fee for license renewal is $300.00 and is due on a biennial basis. Sixteen dollars ($16.00) of each renewal fee is paid to the University of California[21]. These funds are to be used solely for the advancement of optometric research and the maintenance and support of the department in which the science of optometry is taught.

The maximum amount of fees charged by the Board is controlled by statute[22]. In 1992 the Board successfully sought legislation to increase the statutory limits. Prior to the 1992 amendment the Board's fees had not been increased in more than fifteen years. The Board's projected revenue and expenditures for the next four fiscal years will be from license and permit applications, renewals, and delinquent fees at their current levels. Revenue and expenditures for the past four fiscal years is provided in the tables below. The current schedule of fees is also shown.

Fee Schedule	Current Fee	Statutory Limit
Applications:		
Initial Examination	$275.00	$275.00
Re-Exam	175.00	175.00
Certificate of Registration	25.00	25.00
Branch Office License	60.00	60.00
Fictitious Name Permit	10.00	10.00
Optometric Corporation	100.00	100.00
Statement of Licensure	20.00	20.00

[21] B&P 3148
[22] B&P Section3152

Renewals:		
Certificate of Registration (Biennial)	300.00	300.00
Delinquency Fee	25.00	25.00
Branch Office License	60.00	60.00
Delinquency Fee	25.00	25.00
Fictitious Name Permit	10.00	10.00
Delinquency Fee	5.00	5.00
Optometric Corporation	50.00	50.00

REVENUES	ACTUAL				PROJECTED	
	FY 97-98	FY 98-99	FY 99-00	FY 00-01	FY 01-02	FY 02-03
Licensing Fees	1,308,181	968,432	1,005,695	965,683	990,070	962,200
Fines & Penalties	**	**	8,008	3,753	5,000	5,000
Other	23,673	9,643	8,310	3,119	2,500	2,500
Interest	53,743	58,028	66,510	80,872	51,937	49,138
TOTALS	**1,385,597**	**1,036,103**	**1,088,523**	**1,053,427**	**1,049,507**	**1,018,838**

**** The Board did not have cite and fine authority during these fiscal years**

EXPENDITURES	ACTUAL				PROJECTED	
	FY 97-98	FY 98-99	FY 99-00	FY 00-01	FY 01-02	FY 02-03
Personnel Services	426,835	402,704	393,942	391,208	426,062	419,867
Operating Expenses	470,501	717,599	817,966	729,010	677,938	683,138
(-) Reimbursements	- 28,883	- 39,527	- 48,083	- 48,216	- 48,000	- 48,000
(-) Distributed Costs	- 94,731	- 111,769	- 120,647	- 116,522	- 107,218	- 101,907
TOTALS	**773,722**	**969,007**	**1,043,178**	**955,480**	**990,782**	**953,098**

Expenditures by Program Component

EXPENDITURES BY PROGRAM COMPONENT	FY 97-98	FY 98-99	FY 99-00	FY 00-01	Average % Spent by Program
Enforcement	358,542	623,468	716,848	624,366	**56%**
Examination	127,424	118,814	125,902	110,421	**10%**
Licensing	257,200	205,342	215,289	210,022	**19%**
Administrative	154,170	172,679	153,869	163,328	**15%**
Diversion (if applicable)	n/a	n/a	N/a	n/a	**n/a**
TOTALS	**897,336**	**1,120,303**	**1,211,908**	**1,108,037**	

Fund Condition

The Board's fund at the end of the past fiscal year (00/01) reflects a reserve of 11.6 months. A four-year projection indicates a reserve of 5.9 months bringing the Board under the statutory limit[23] of six months. It should be noted that for budget year 99/00 the DCA fund analysis had reflected a reserve level of 6.5 months for the 00/01 fiscal year. It is unclear, given the expenditure and revenue patterns, why the reserve is at its present level. The Board will do an additional analysis, given the expenditure and revenue patterns, to determine whether a decrease in renewal fees is warranted.

ANALYSIS OF FUND CONDITION	FY 99-00	FY 00-01	FY 01-02 (Budget Yr)	FY 02-03 (Projected)	FY 03-04 (Projected)	FY 04-05 (Projected)
Total Reserves, July 1	1,144,823	1,069,385	1,038,745	982,752	874,130	737,677
Total Rev. & Transfers	1,088,522	1,049,674	1,042,007	1,011,338	1,005,906	999,084
Total Resources	2,233,345	2,110,877	2,080,752	1,994,090	1,880,036	1,736,761
Total Expenditures	1,163,960	1,072,132	1,098,000	1,119,960	1,142,359	1,165,206
Reserve, June 30	1,069,385	1,038,745	982,752	874,130	737,677	571,555
MONTHS IN RESERVE	**11.1**	**11.6**	**10.7**	**9.4**	**7.7**	**5.9**

C. LICENSURE REQUIREMENTS

Education, Experience and Examination Requirements

The Board was first established over ninety years ago and does not have any practicing licensees who were not subject to entry level competency testing requirements at the time of initial licensure. Individuals seeking licensure from the Board must first meet the following requirements:

- Possess a high school diploma or equivalent[24].
- Granted an Optometric Doctorate degree from an accredited school, college, or university or its division or department[25]. The Board's accreditation of optometry schools is delegated to the Council on Optometric Education which sets the standards for all domestic and a limited number of foreign schools and is not unreasonably restrictive or anti-competitive.
- Pass the National Board of Examiners in Optometry's Parts I and II examinations as well as the Clinical Skills portion of the Part III examination
- Pass the California Patient Management and Laws and Regulations examinations. The statute allows for a limited waiver of examination requirements for instructors employed by either of the California schools of optometry. Individuals must have taught in a California school of optometry for five years, hold a valid optometric license in another state, pass the

[23] B & P Section 3145

[24] B&P 3050

[25] B&P 3047

Board's law examination, and meet any other criteria as determined by the Board.[26] This is the only instance where qualifying experience applies to obtaining a license in California. Except as noted for faculty at the California schools, the educational and examination requirements for an applicant who is already licensed as an optometrist in another state or country are the same as those for new optometry graduates. Applicants licensed in another state or country must:

- Be a high school graduate.
- Have an optometric doctorate (OD) degree.
- Pass the National Board of Examiners in Optometry's Parts I and II examinations as well as the Clinical Skills portion of the Part III examination.
- Pass the California Patient Management and Laws and Regulations examinations.

A candidate seeking licensure must submit an application to take the licensing examination and provide the following information[27]:

- Name, address, telephone number, birth date, and Social Security ID.
- Optometry school(s) attended and date of graduation.
- National Board of Examiners in Optometry (NBEO) transcript information.
- Information concerning previous examination applications to the Board .
- Other state licensure information.
- Other state licensure denials, suspensions, and/or revocations.
- Medical information indicating an ailment that is communicable to others.
- Information indicating whether, as a juvenile or adult, the applicant has been convicted of or plead nolo contendere to any crimes other than Vehicle Code offenses in which the fines levied were less than $50.00.
- Examination site preferences.
- Declaration of truth of information provided by applicant.

•

Verification of Information

Information provided on examination applications is supported by confirming documentation from other governmental agencies and educational and testing entities. When applications are reviewed, official school and test transcripts (received directly from optometry schools and the NBEO) are examined for degree(s) awarded and passing scores, respectively. After initial review, examination staff, without the aid of an automated tracking system, tracks applicants.

Past criminal activity is verified by Department of Justice (DOJ) fingerprint checks. If a criminal conviction is indicated by the DOJ the application is referred to enforcement staff for investigation and determination as to whether the conviction is substantially related to the practice of optometry as required by statute[28].

Verification of licensure in other states and prior practice history, including malpractice actions, is done through the use of the Association of Regulatory Board of Optometry (ARBO) Practitioner Disciplinary Data Bank. Cases involving disciplinary action in another state is verified directly with the appropriate state licensing agency.

[26] B&P 3042.5 (b) & 3056 (a)
[27] B&P 3044 and 3045, CCR 1530.1
[28] B&P 480

Examination Passage Rates

National Board of Examiners in Optometry				
	NATION-WIDE		CALIFORNIA ONLY	
YEARS	TOTAL CANDIDATES	PASSAGE RATE	TOTAL CANDIDATES	PASSAGE RATE
1997/98			Not Available	
Part I	2,008	73%		
Part II	1.502	84%		
Part III	1,373	93%		
1998/99			Not Available	
Part I	1,992	65%		
Part II	1,590	86%		
Part III	1,437	94%		
1999/00			Not Available	
Part I	1,996	69%		
Part II	1,528	86%		
Part III	1,448	92%		
2000/01			Not Available	
Part I	1,955	72%		
Part II	1,554	91%		
Part III	1,437	90%		
*NOTES				

California Patient Management				
	1997/98	1998/99	1999/00	2000/01
CANDIDATES	312	548	318	302
PASS %	77%	71%	88%	84%
NOTE:				

California Law and Regulations				
	1997/98	1998/99	1999/00	2000/01
CANDIDATES	243	479	267	267
PASS %	95%	93%	91%	92%
NOTE:				

Examination Validity/Occupational Relevance

As the strictest form of regulation, state licensure is rightly viewed by the public as a confirmation by the state that the license holder possesses a special or higher degree of proficiency in his/her profession. Because the impact of optometric services on public health and safety is direct, immediate, and sometimes irreparable, it is critical that only fully-qualified candidates are allowed to practice in California. The Board's licensure examination requirements are designed to ascertain whether applicants possess the minimum competencies for safe practice. A valid and reliable examination must have content validity that is representative of and relevant to the domain tested. To ensure the content validity of the optometry licensure exam, the Board conducted an occupational analysis, which was completed in 1992. The results of this analysis provided the foundation upon which an examination blueprint was developed. The blueprint specifications guided the setting of testing requirements applicants must fulfill, and the construction of the Board administered examination. The dynamic and technical nature of the health care profession emphasizes the importance of a comprehensive and up-to-date analysis of the occupation. For these reasons, the Board adopted a plan calling for the assessment of the practice of optometry every five years. In keeping with this plan, in October 1997 the Board contracted with the DCA, Office of Examination Resources for the performance of an up-to-date analysis. OER submitted its final report April 2001 and this report is to be used as the basis for future exam development.

Examination Processing Times

The Board offers its licensing examination two times a year; typically the second Monday in January and last Monday in June. The January examination consists mainly of those applicants failing the previous June examination. Applications for the June licensing examination are submitted in May and early June each year. The average time between submission of a candidate's application and the administration of the examination has been a consistent 45 days. The regularity of the average time from application submission to exam administration is attributed to the fact that most applicants graduate from optometry school, and are therefore qualified, approximately 45 days prior to the exam administration. Examination results are mailed, on average, 28.5 days after the exam administration. With scoring assistance from the OER, the Board has been able to mail results no later than 32 days following the exam.

AVERAGE DAYS TO RECEIVE LICENSE	FY 1997/98	FY 1998/99	FY 1999/00	FY 2000/01
Application to Examination	45	45	45	40
Examination to Issuance	24	30	28	32
Total Average Days	**69**	**75**	**73**	**62**

License Denials

The Board may deny an application for licensure under Business and Professions Code Sections 480 and 3044. Decisions for denying a license are made on a case-by-case basis and include consideration of factors such as: Whether the act took place in an optometric

setting; was there personal or financial injury to another, and if so, the severity and; whether the applicant's ability to practice safely is affected by the action. Determinations concerning false statements provided on applications may also take into consideration willful intent on the part of the applicant to misled the Board or conceal facts or information.
Under CCR Section 1516 - in determining rehabilitation - the Board may consider the nature and severity of the act(s), the applicant's total criminal record, the amount of time elapsed since the commission of the act(s), whether the applicant has complied with the terms of the previous discipline and other evidence of rehabilitation.

Continuing Education/Competency Requirements

In order to renew a license in active status licensees must meet statutorily mandated continuing education requirements[29]. Currently, an optometrist renewing an active license must complete 40 hours of course work every two years or 50 hours if the doctor is certified to use therapeutic pharmaceutical agents (TPA). Additionally, TPA certified optometrists must fulfill 35 of the required 50 hours on the diagnosis, treatment and management of ocular disease as follows: 12 hours on glaucoma; 10 hours on ocular infections; five hours on inflammation and topical steroids; six hours on systemic medications and two hours on the use of pain medications. The Board monitors compliance with the CE requirements by conducting a random audit of 10% of license renewals each month. The Board's average compliance rate is 94.5%. If an optometrist fails to comply with this requirement, his/her license will be renewed but placed in an "inactive" status until the required hours of CE are obtained. continuing education as a remediation tool in cases involving licensee found to negligent or lacking in professional competence. The licensee is directed by the terms of the Board's decision or stipulated settlement as to the education to be obtained. The conditions under which such remedial education would be required are outlined in Board's disciplinary guidelines. The Board has formed partnerships with the two California schools of optometry to develop and provide remedial education courses in areas related to professional skills, ethics, clinico-legal issues, etc. An optometrist cannot practice optometry in California while holding an inactive license. The Board also uses

Comity/Reciprocity With Other States

Currently, there is no reciprocity with other states. An applicant for licensure in California who also holds a license in another state or country must meet all of the same requirements as previously described. Information provided by these applicants is verified in the same manner described. The Board is mindful of its responsibility to ensure that practice restrictions are not overly burdensome and continues to look for opportunities to increase access to licensure. In keeping with this goal the Board recently adopted a regulation - now pending approval - which would accept all parts of the NBEO examination in lieu of the Board administered exam, a practice currently observed by 37 states. This move was facilitated by recently enacted legislation (SB 929) which brings California's scope of optometric practice to a level more consistent with other states and to that currently tested by the NBEO. Since nearly 100% of new graduates take all parts of the NBEO exam, applicants who have passed this exam could become licensed in California and the other 37 states by passing only a state-specific jurisprudence exam.

[29] B&P 3059

D. ENFORCEMENT ACTIVITY

ENFORCEMENT DATA	FY 1997/98	FY 1998/99	FY 1999/00	FY 2000/01
Inquiries (Complaint Info Only)	Total: 215	Total: 242	Total: 250	Total: 355
Complaints Received (Source)	Total: 308	Total: 273	Total: 245	Total: 257
Public	134	126	125	110
Licensee/Professional	50	81	38	26
Groups	11	18	11	3
Governmental Agencies	113	48	71	118
Other				
Complaints Filed (By Type)	Total: 308	Total: 282	Total: 303	Total: 257
Competence/Negligence	30	18	21	26
Unprofessional Conduct	120	115	117	110
Fraud	28	21	13	16
Health & Safety	65	51	86	27
Unlicensed Activity	78	73	63	73
Personal Conduct	3	4	3	5
Complaints Closed	Total: 275	Total: 258	Total: 208	Total: 169
Investigations Commenced	Total: 44	Total: 40	Total: 37	Total: 66
Compliance Actions	Total: 100	Total: 112	Total: 94	Total: 111
ISOs & TROs Issued	0	0	0	0
Citations and Fines	0	0	6	4
Public Letter of Reprimand	3	0	19	0
Cease & Desist/Warning	96	112	69	107
Referred for Diversion	0	0	0	0
Compel Examination	0	1	1	0
Referred for Criminal Action	Total: 4	Total: 2	Total: 6	Total: 6
Referred to AG's Office	Total: 14	Total: 16	Total: 27	Total: 18
Accusations Filed	2	12	3	3
Accusations Withdrawn	1	0	0	0
Accusations Dismissed	0	0	0	3
Stipulated Settlements	Total: 6	Total: 5	Total: 4	Total: 4
Disciplinary Actions	Total: 20	Total: 7	Total: 14	Total: 12
Revocation	8	1	7	7
Voluntary Surrender	1	2	0	0
Suspension Only	0	0	0	0
Probation with Suspension	2	2	1	0
Probation	9	1	6	5
Probationary License Issued	0	1	0	0
Public Reproval	0	0	0	1
Probation Violations	Total: 1	Total: 1	Total: 2	Total: 1
Suspension or Probation	1	0	0	0
Revocation or Surrender	0	1	2	1

Petitions for Reinstatement	Total: 4	Total: 0	Total: 2	Total: 1
*NOTES				

Enforcement Program Overview

The California Board of Optometry is mandated to protect the public's health, safety, and welfare by ensuring that individuals are competent to practice optometry and that the laws governing the practice of optometry are enforced in a fair and judicious manner. The Board has the power, duty, and authority to investigate violations of the provisions of the Business and Professions Code, Chapter 7, Division 2, Section 3000 seq. The Board is also given specific authority to receive and investigate complaints and to discipline violators accordingly. In the administration of consumer protection board staff is guided in their daily complaint response and enforcement functions by the Board's *Complaint and Enforcement Process* guide(Appendix D-I) together with the *Disciplinary Guidelines and Model Disciplinary Orders* (Appendix D-II). Anyone may file a complaint against a licensed optometrist with the Board of Optometry. The Board also investigates complaints against any individual suspected of practicing optometry without a license. Complaints are generally filed by patients, subsequent treating optometrists, employees, attorneys, insurance companies, or local law enforcement agencies.

The Board receives an average of 265 complaints a year with the largest percentage (46%) of complaints filed by consumers. Of the total number of complaints received annually, unprofessional conduct is the most often alleged violation. Unprofessional conduct includes allegations such as patient abandonment, breach of confidentiality, failure to release records, unethical practices, theft, and failure to report abuse.

The following are some of the unique reporting requirements pursuant to Article 11, Professional Reporting, Business and Professions Code Section 800:

801 Within 30 days, every insurer providing professional liability insurance to a licensee must report to the Board, any settlement or arbitration award over $3,000 of a claim or action for damages for death or personal injury caused by that licensee's negligence, error, or omission in practice, or rendering of unauthorized professional services.

801.1 Within 30 days, every state or local agency that self insures a licensee must report to the Board, any settlement or arbitration award over $3,000 of a claim or action for damages for death or personal injury caused by that licensee's negligence, error, or omission in practice, or rendering of unauthorized professional services.

802 Within 30 days, a licensee who does not possess professional liability insurance must report to the Board, every settlement or arbitration award over $3,000 of a claim or action for damages for death or personal injury caused by negligence, error or omission in practice, or the unauthorized rendering of professional services.

803. Within 10 days after a judgement by a court of this state that a licensee has committed a crime, or is liable for any death or personal injury resulting in a judgement in excess of $30,000 caused by that licensee's negligence, error or omission in practice, or the unauthorized rendering of professional services, the clerk of the court rendering the judgement, must report that fact to the Board.

There are problems with the Board's receiving relevant complaint information or obtaining information for investigative purposes in that it often takes years for the parties to come to an

agreement, and some agreements include a confidentiality clause, prohibiting the victim from discussing any of the details of the settlement. When the Board receives reports of settlement or arbitration awards, copies of depositions of all parties and all relevant clinical records are obtained via the Division of Investigation. The Board then recruits an impartial expert consultant to review these documents and provide an opinion as to whether there was a departure from the standard of care. When many years have passed before an agreement is reached, it can be both difficult and extremely time consuming to obtain all of the documents necessary for the expert consultant's review and opinion. When a settlement includes a confidentiality agreement, the Board is sometimes unable to obtain the necessary complaint information for investigative and disciplinary purposes.

All types of cases are considered for settlements whenever appropriate. Board staff is always open to settlement discussions. Stipulated settlements are most often less time consuming and less costly than an administrative hearing. Stipulated settlements can accomplish the Board's goal of consumer protection in a more expeditious and economical manner. Referring to the Board's Disciplinary Guidelines and Model Disciplinary Orders, Enforcement Manager and Executive Officer work with the assigned Deputy Attorney General in all administrative cases.

Since the last Sunset Review in October 1997 there has been an increase in the number of investigations initiated. The average of investigations per year has increased from 27 to 47. The average number of cases being referred to the Attorney General's Office has increased from 11 to 19.

Of the 1,083 complaints received over the past four years, an average of 83 percent were closed, 17 percent were referred for investigation, 3 percent had accusations filed, and 3 percent resulted in disciplinary action. Since the last Sunset Review, the average number of disciplinary actions has increased by approximately 2 ½ percent (average of 3 actions per year).

NUMBER AND PERCENTAGE OF COMPLAINTS DISMISSED, REFERRED FOR INVESTIGATION, TO ACCUSATION AND FOR DISCIPLINARY ACTION				
	FY 1997/98	FY 1998/99	FY 1999/00	FY 2000/01
COMPLAINTS RECEIVED	**308**	**273**	**245**	**240**
Complaints Closed	275	258	208	169
Referred for Investigation	44	40	37	66
Accusation Filed	2	12	3	3
Disciplinary Action	12	6	9	7

Case Aging Data

Time frames on the average percentage of cases and days involved from opening to completion of an investigation have increased since the last review: 10 percent of our investigations were closed in 90 days; 31 percent were closed in 180 days: 43 percent were closed in one year; 14 percent were closed in two years; 2 percent were closed in three years; and no cases took more than three years to complete.

Of the cases referred to the Attorney General's Office 46 percent were closed in one year; 35 percent were closed in two years; 12 percent were closed in three years; 4 percent were closed in four years; and, no cases took more than four years to complete. Since the last review there has been a decrease in the number of days it takes to close cases referred to the Attorney General's office.

AVERAGE DAYS TO PROCESS COMPLAINTS, INVESTIGATE AND PROSECUTE CASES				
	FY 1997/98	FY 1998/99	FY 1999/00	FY 2000/01
Complaint Processing	62	36	63	60
Investigations	236	249	238	146
Pre-Accusation*	206	240	298	265
Post-Accusation**	301	314	303	443
TOTAL AVERAGE DAYS* **	**805**	**839**	**902**	**914**

*From completed investigation to formal charges being filed.
**From formal charges filed to conclusion of disciplinary case.
***From date complaint received to date of final disposition of disciplinary case.

INVESTIGATIONS CLOSED WITHIN:	FY 1997/98	FY 1998/99	FY 1999/00	FY 2000/01	AVERAGE % CASES CLOSED
90 Days	3	3	4	6	**10%**
180 Days	10	12	10	16	**31%**
1 Year	7	20	23	18	**43%**
2 Years	6	3	3	10	**14%**
3 Years	0	0	0	3	**2%**
Over 3 Years	0	0	0	0	**0%**
Total Cases Closed	**26**	**38**	**40**	**53**	
AG CASES CLOSED WITHIN:	**FY 1997/98**	**FY 1998/99**	**FY 1999/00**	**FY 2000/01**	**AVERAGE % CASES CLOSED**
1 Year	7	6	6	1	**46%**
2 Years	4	1	6	4	**35%**
3 Years	4	0	1	0	**12%**
4 Years	0	0	1	2	**7%**
Over 4 Years	0	0	0	0	**0%**
Total Cases Closed	**15**	**7**	**14**	**7**	
Disciplinary Cases Pending	**14**	**11**	**12**	**12**	

Cite and Fine Program

The Board promulgated regulations to issue citations and fines in 1999 under the authority of B & P § 125.9. The amount of administrative fines which range from $50 to $2,500 per violation, are directed by prior violations, severity of offense and other mitigating evidence. The citation program provides the Board with an expedient method of addressing violations more technical in nature that don't result in physical or financial harm to the patient.

CITATIONS AND FINES	FY 1997/98*	FY 1998/99*	FY 1999/00	FY 2000/01
Total Citations	**n/a**	**n/a**	**6**	**4**
Total Citations With Fines	**n/a**	**n/a**	6	4
Amount Assessed	**n/a**	**n/a**	**21,771**	**7,057**
Reduced, Withdrawn, Dismissed	**n/a**	**n/a**	2	3
Amount Collected			**13,616**	**2,152**

cite and fine authority effective 9/16/99

Diversion Program

The Board currently does not have a diversion program. Until recently optometrists had limited access to controlled substances. However, with the recent scope expansion, optometrists now may obtain and prescribe certain Schedule III Narcotic drugs. The Board will be exploring the need and feasibility of developing a diversion program.

Results of Complainant Satisfaction Survey

CONSUMER SATISFACTION SURVEY RESULTS*				
QUESTIONS	**Percent Satisfied by Calendar Year**			
# Surveys Mailed: 268 **# Surveys Returned: 114**	**1997**	**1998**	**1999**	**2000**
1. Were you satisfied with knowing where to file a complaint and whom to contact?	82%	66%	100%	100%
2. When you initially contacted the Board, were you satisfied with the way you were treated and how your complaint was handled?	72%	100%	100%	87%
3. Were you satisfied with the information and advice you received on the handling of your complaint and any further action the Board would take?	63%	100%	80%	50%
4. Were you satisfied with the way the Board kept you informed about the status of your complaint?	63%	66%	80%	66%
5. Were you satisfied with the time it took to process your complaint and to investigate, settle, or prosecute your case?	61%	66%	66%	61%

6. Were you satisfied with the final outcome of your case?	46%	82%	60%	75%
7. Were you satisfied with the overall service provided by the Board?	**60%**	**72%**	**80%**	**66%**

*****All Boards and committees under review this year shall conduct a consumer satisfaction survey to determine the public's views on certain case handling parameters. (The Department of Consumer Affairs currently performs a similar review for all of its bureaus.)
A list of seven questions have been provided. Each Board or committee shall take a random sampling of closed complaints and disciplinary actions for a four year period. Consumers who filed complaints should be asked to review the questions and respond to a 5-point grading scale (i.e., 5, 4, 3 =satisfied to 1, 2 =dissatisfied). The Board or committee shall provide the percent of satisfaction for each of the past four years.

D. ENFORCEMENT EXPENDITURES

AND COST RECOVERY

AVERAGE COST PER CASE INVESTIGATED	FY 1997/98	FY 1998/99	FY 1999/00	FY 2000/01
Cost of Investigation & Experts	**68,702**	**151,989**	**199,569**	**267,116**
Number of Cases Closed	26	38	40	53
Average Cost Per Case	2,642	3,999	4,989	5,039
AVERAGE COST PER CASE REFERRED TO AG	**FY 1997/98**	**FY 1998/99**	**FY 1999/00**	**FY 2000/01**
Cost of Prosecution & Hearings	**67,837**	**237,165**	**267,363**	**107,689**
Number of Cases Referred	14	16	27	18
Average Cost Per Case	7,487	18,821	9,902	5,982
AVERAGE COST PER DISCIPLINARY CASE	**7,487**	**18,821**	**14,891**	**11,021**

Cost Recovery Efforts

The Board seeks cost recovery in most cases. Cost recovery is always negotiated in stipulated settlements. In cases where the respondent is placed on probation cost recovery generally proceeds in compliance with established payment schedules. However, those cases calling for the revocation or a significant suspension period, costs are often difficult to collect. In these cases respondents have fewer financial resources due to the suspension of practice, or in the case of revocation, have no incentive to pay.

Since the last review there has been an increase in cost recovery ordered. This is attributed to more standardized procedures relating to the assessment and identification of costs.

COST RECOVERY DATA	FY 1997/98	FY 1998/99	FY 1999/00	FY 2000/01
Total Enforcement Expenditures	**136,539**	**389,154**	**466,932**	**374,805**
# Potential Cases for Recovery*	12	6	9	7
# Cases Recovery Ordered	10	3	8	7
Amount of Cost Recovery Ordered	63,889	37,535	85,032	46,291
Amount Collected	**28,883**	**20,454**	**19,334**	**32,350**

*The "Potential Cases for Recovery" are those cases in which disciplinary action has been filed based on a violation, or violations, of the License Practice Act.

Note: Amounts collected are less than amounts ordered as they reflect monies collected pursuant to payment schedules.

F. RESTITUTION PROVIDED TO CONSUMERS

RESTITUTION DATA	FY 1997/98	FY 1998/99	FY 1999/00	FY 2000/01
Amount Ordered *				
Amount Collected	3,299.50	3,038.29	5,361.75	2,225.73

*** Although, the Board cannot order restitution outside of a stipulated agreement or an Administrative Law Judge's proposed decision, through the informal complaint process it is often recommended to a licensee that consumers monies be refunded in order to satisfactorily resolve a complaint. In addition, many licensees often offer refunds of monies in order to resolve complaints filed against them.**

G. COMPLAINT DISCLOSURE POLICY

It is the belief of the Board of Optometry that consumer protection is best achieved when consumers are provided with the information necessary to make educated and informed decisions regarding their vision care needs. Therefore, it is the policy of the Board that information concerning the conduct of optometrists licensed in the State of California be provided to the general public upon request.

TYPE OF INFORMATION PROVIDED	YES	NO
Complaint Filed (disclosed after closed)	**X**	
Citation	X	
Fine	X	
Letter of Reprimand	X	
Pending Investigation		X
Investigation Completed		X
Arbitration Decision	N/A	
Referred to AG: Pre-Accusation		X
Referred to AG: Post-Accusation	X	
Settlement Decision	X	
Disciplinary Action Taken	X	
Civil Judgment*	X	
Malpractice Decision	X	

Criminal Violation*: Felony Misdemeanor	X	

The following guidelines are used in determining information that may be disclosed:

Complaint Information - Information concerning complaints filed against a licensee of the Board may be disclosed in accordance with the following criteria:

1. The individual complaint has been closed (including those later included in a formal investigation)
2. The complaint was closed within a three year period immediately preceding the request for information
3. In the opinion of the Board's enforcement staff the complaint investigation revealed sufficient information to indicate a probable violation of the law

Under no circumstances shall the Board staff disclose to the general public any complaint found to be invalid, did not contain sufficient information to substantiate the probability of a violation or has not yet been closed and a disposition rendered.

Formal Investigations - Information concerning any ongoing formal investigation of a licensee shall not be disclosed to the general public, except to the extent that the investigative case contains individual closed complaints which may be disclosed under the above-cited criteria.

Disciplinary Action - All formal disciplinary actions involving a licensee shall be released upon request, citing the specific offense(s) and action taken. In addition these actions shall be published in the Board newsletters.

H. CONSUMER OUTREACH, EDUCATION AND USE OF THE INTERNET

The Board has utilized different approaches to achieve consumer education and to ready information that facilitates the Board's consumer protection mandate. The Board has recently participated in several consumer outreach activities. At these functions staff is available to answer questions, provide complaint forms and pamphlets pertaining to the optometric profession and their consumer rights. Written information is also available which discusses issues relative to ocular health care and related pathologies.

Online Information

Aside from the community outreach functions, the Board's primary education and outreach vehicle is our website. The website provides a variety of vital information for consumer including:

- License verification that enables all parties to access licensee current and past license and enforcement data. The data can be simply accessed by providing any part of a doctor's actual or fictitious name. Consumers can make informed decisions regarding the selection of an optometrist relative to whether the doctor is certified to treat ocular disease or has a disciplinary history. Consumers also can check on the status of their existing doctor's license.

- Information is available on the website's "Frequently Asked Questions" page. If a consumer has additional concerns they may contact the Board via the central email address. Email box messages are distributed to appropriate staff daily with responses

- Downloading of all applications such as practitioner business licenses and permits as well as consumer complaint forms and can be accomplished. At this time it is not feasible for the Board to conduct online business transactions through the website inasmuch as additional information such as lease agreements, articles of incorporation, and payments can not be submitted via the Internet for renewing or obtaining a license or permit.

- Licensure candidates may obtain licensing information and be informed of any new or pending changes in the process that may effect the issuance of a license to practice optometry in California. At this time the Board does not provide the License Examination application on the web. Presently, two examinations are offer annually with the second administration providing two testing sites for candidate convenience. The applications for each administration differ in that one provides a choice of sites. It has been the Board's experience that candidates frequently submit the wrong application for testing. This often impacts candidate's ability to sit for an examination due to the inability to present at a specific site.

Online Business

Other than the downloading of forms and applications mentioned above, for various reasons the Board currently does not conduct business online. Relative to the filing of applications the Board must receive various original documents from third parties, e.g. transcripts from optometry schools, national testing results, articles of incorporation, etc. As for testing online, there are a number of security concerns that must be addressed in order to assure that only those who possess the requisite skills and competencies for safe practice are licensed. However, the Board continues to look for opportunities to improve its efficiency and effectiveness through the use of the internet. It is our understanding that Nursing Board is currently involved in a pilot project to explore the possibility of online license renewal. If successful, the Board will consider moving in this direction as well.

Improving Online Services

The Internet could be further utilize to improve Board service to consumers by including information on consumer interest subjects such as purchasing contact lenses and spectacles, and what constitutes a comprehensive eye exam. Licensees would be better informed if the Board's website included trends or patterns of consumer complaints. Knowing what consumer issues are being presented to the Board for investigation could cause changes in the operation delivery of care in their practices that would result in better serving their patients.

Regulation of Online Practices

Presently the Board is not aware of the provision of online/practice without presence optometric services in California and, therefore, has not formulated any plans for Internet regulatory activities. However, given the ongoing advancements in technology used by members of the healing arts the Board continues to monitor this issue.

PART 2.

Board of Optometry

BOARD'S RESPONSE TO ISSUES IDENTIFIED AND FORMER RECOMMENDATIONS MADE BY THE JOINT LEGISLATIVE SUNSET REVIEW COMMITTEE

ISSUE #1. Should the State's licensing of optometrists be continued?

Recommendation: ***Both the Department and Committee staff recommended the continued licensure of optometrists.***

Vote: ***The Joint Committee adopted the recommendation of the Department and Committee staff by a vote of 6-0.***

Comment: The Board of Optometry licenses and regulates approximately 7,500 Doctors of Optometry (OD) and about 400 optometric corporations, comprising the largest contingent of OD's of all states in the U.S. Optometrists are licensed in all 50 states and the District of Columbia.

An incompetent or unethical optometrist can cause serious and permanent harm, both physically and financially, to the unsuspecting public. Many procedures performed by optometrists involve direct contact with the eye. Partial or permanent vision loss due to an optometrist's negligent acts or incompetent practice has severe and dramatic consequences, including serious and irreparable diminution of the patient's quality of life.

In addition to serious physical harm, without regulation, the unethical optometrist's fraudulent practices put the public at risk for suffering extreme financial injury. According to statistics provided by the Board, the great majority of its investigations and disciplinary actions involve fraud or related allegations. Fraudulent or misleading claims by unscrupulous practitioners can cause unreasonable expectations on the part of consumers. It is only after a substantial amount of money has been paid in professional services or products that the patient is advised, or realizes, that the outcome will not be as promised or expected. Individuals least equipped to protect their own interests, like the elderly and disabled, are often the victims of these practices.

Board Response: The Board agreed with the committee recommendation.

ISSUE #2. Should an independent Board of Optometry be continued, or should its operations and functions be assumed by the Department of Consumer Affairs?

Recommendation: ***Both the Department and Committee staff recommended that the Board of Optometry be retained as the independent state agency to regulate and license optometrists. Committee staff recommended that the sunset date of the Board be extended for four years (to July 1, 2003).***

Vote: ***The Joint Committee adopted the recommendation of the Department and Committee staff by a vote of 6-0.***

Comment: The Board of Optometry generally functions efficiently and effectively to ensure licensees' competence and pursue egregious disciplinary cases. However, see additional discussion (below) of the need for the Board of Optometry to enhance its program efforts in the areas of consumer information, outreach, and enforcement.

Board Response: **The Board agreed with the committee recommendation.**

ISSUE #3. Should the composition of the Board of Optometry be changed?

Recommendation: ***This Board has nine (9) members, of whom six (6) are licensed optometrists and three (3) are public members. The Department generally recommends a public member majority and an odd number of members for regulatory Boards. For the Board of Optometry, the Department recommended an increase in public membership to improve balance consistent with those guidelines. Committee staff concurred with the Department, and recommended adding one more public member to the Board and removing one of the optometrist members. The composition of the Board would still be 9 members, but with five (5) optometrists and four (4) public members.***

Vote: ***The Joint Committee did not adopt the recommendation of the Department and Committee staff by a vote of 2-3.***

Comment: The Department and Committee staff believe the current composition of the nine-member Board of Optometry, 6 optometrists and 3 public members, is *overbalanced toward optometrist members*. The Joint Committee may wish to consider converting one of the optometrist positions to a public member.

This recommendation is based on the belief that a regulatory Board dominated by professional members (a 2-to-1 majority in this instance), may tend to place greater emphasis on issues of competence (e.g., examinations, continuing education, expanded scope of practice) and correspondingly less emphasis and resources on consumer education/information, and enforcement. And, while it generally functions efficiently, the Board of Optometry may be a case in point.

In recent years, the Board has revamped and improved its licensing examination, instituted new continuing education requirements, and implemented the TPA law, which expanded optometrists' scope of professional activities. All of these achievements enhance the professional stature, competence and level of service that OD's provide to patients, and all are

noteworthy accomplishments. However, there may not have been equally noteworthy initiatives in the areas of consumer information or enforcement.

In the area of *consumer information*, the Board's consumer survey (conducted as part of the sunset review process) indicated "an overall dissatisfaction with the Board's visibility to the general public," despite the fact that the same survey indicated that 72% of respondents were satisfied with the Board's overall service/effectiveness. It appears that the Board needs to be more assertive in making its existence known and presence felt among *consumers of optometrists' services.*

In the area of *enforcement*, the Board's emphasis on competency issues seems to overlook the fact that the majority of its complaints and investigations, and most of its disciplinary actions, are only marginally related to competence. Board statistics for 1996/97 illustrate:

Investigations opened: Fraud, 6; Non-jurisdictional/ unlicensed (including advertising), 5; Personal Misconduct, 5; Health and Safety, 0; Unprofessional Conduct, 0; Incompetence/Negligence, 2.

Disciplinary actions**:** Of 12 completed in 1996/97, Health and Safety accounted for 0; Incompetence/Negligence, only 2.

There is no doubt that the practice of optometry involves serious health and economic issues for consumers, and the Board has achieved disciplinary sanctions in a few egregious cases. However, this analysis suggests that enforcement cases are rarely related to issues of licensee competence, and a *profession-dominated Board may tend to overemphasize competence at the expense of consumer outreach and enforcement*. Accordingly, the Legislature may wish to consider altering the Board composition to provide better balance among the Board of Optometry programs.

It should also be noted that this movement *away from dominant super-majorities* of professional members and *toward closer parity between public and professional members* is consistent with both the Joint Committee and Department of Consumer Affairs recommendations regarding other Boards that have undergone sunset review.

Board Response: The Board did not agree with the staff recommendation.

Comment: The Board provided the following reason: The present composition of the Board provides a well-balanced approach to consumer protection. The Board's record demonstrates a dedication to act in the public's interest by all of its members, both public and professional. With a composition of six professional, and three public members, California citizens are assured consumer protection is carried out with a sufficient base of technical and scientific knowledge upon which sound decisions for safe practice can be made.

Although the Board did not agree with the staff recommendation to change the composition of the Board, it did look at the areas cited in the comments, i.e. enforcement and consumer outreach. As reflected by the statistics in this report the Board has placed a greater in the area of enforcement where overall spending is up 15% from an average of 41% in 1997, to 56% in 2001. Additionally, the Board has used the internet to provide consumers with information upon which to make more informed decisions about eye care services, i.e. license look-up, frequently asked questions and links to consumer eye care guides.

3.
BACKGROUND PAPER FOR HEARING

IDENTIFIED ISSUES, QUESTIONS FOR THE BOARD, AND BACKGROUND CONCERNING ISSUES

PRIOR SUNSET REVIEW: The Board of Optometry (Board) was last reviewed by the Joint Legislative Sunset Review Committee (JLSRC) four years ago (1997-98). The JLSRC and the Department of Consumer Affairs (DCA) identified three issues and made recommendations regarding them. The first was: Should the state's licensing of optometrists be continued? Both the JLSRC staff and the DCA recommended continuation and the JLSRC voted 6-0 to adopt that recommendation. The second was: Should an independent Board of Optometry be continued to administer the optometry licensing laws or should it be sunset and its operations and functions be assumed by the DCA? Both the JLSRC staff and the DCA recommended continuation of the Board, and the JLSRC voted 6-0 to adopt that recommendation. The third was more controversial and was: Should the composition of the Board of Optometry be changed? The Board had (and has) 9 members – 6 licensed optometrists and 3 public members. Both the JLSRC staff and the DCA recommended increasing the representation of the public members on the Board. The JLSRC staff specifically recommended removing one licensee optometrist member and adding one public member, which would still maintain the Board at 9 members, but with a composition of 5 optometrists, and 4 public members. However, the JLSRC did **not** adopt the recommendation of its staff or the DCA by a vote of 2 in favor and 3 against.

GENERAL BACKGROUND AND DESCRIPTION OF THE BOARD

The Board of Optometry was created by the California Legislature in 1913. The Board currently licenses approximately 7700 optometrists and 400 optometric corporations. The Board is composed of 9 members – 6 licensed optometrists and 3 public members. Currently, the Board has three licensed optometrist member vacancies (Governor appointments). The Board has 8 standing committees whose members are appointed by the Board's President. For 2001 they are: Administrative (Dr. Easton – licensee), Regulations (Dr. Grant – licensee), Legislation (Mrs. Vogel – public), Examination and Licensing (Dr. Grant – licensee), Credentials (Mrs. Vogel - public), Continuing Education (Dr. Easton - licensee), Enforcement (Dr. Titus – licensee), and Public Relations (Mrs. Gee). The Board employs one Executive Officer and 6 additional staff persons.

The Board has an annual budget of approximately $1.1 million, a fund reserve of 11.6 months as of July 1, 2001 which is projected to drop to 5.9 months by July 1, 2004. The Board's licenses are issued for two years, and to become a licensed optometrist an applicant must be a high school

graduate, obtain an optometric doctorate degree (O.D.), pass Parts I, II, and the Clinical Skills portion of Part III of the National Board of Examiners in Optometry's national exam, and pass the California Patient Management and Laws and Regulations examinations. The Board offers its licensing examination two times a year – January and June – with the January exam consisting mainly of applicants who have failed the previous June exam. To renew a license, an optometrist must pass 40 hours of continuing education (CE) every two years or 50 hours if the optometrist is certified to use therapeutic pharmaceutical agents (TPAs). TPA-certified optometrists must fulfill 35 of their required 50 hours on the diagnosis, treatment and management of ocular disease as follows: 12 hours on glaucoma, 10 hours on ocular infections, 5 hours on inflammation and topical steroids, 6 hours on systemic medications, and 2 hours on the use of pain medications.

Currently, there is no reciprocity with other states. However, the Board recently adopted a regulation – now pending approval – which would accept all parts of the NBEO exam in lieu of the Board-administered exam, as is currently done by 37 other states. Since most new optometry school graduates currently take all three parts of the NBEO exam, applicants who have passed that exam could become licensed in California and the other 37 states by passing only a state-specific jurisprudence exam (e.g., for California – its Laws and Regulations exam).

Over the past four years the number of complaints received by the Board has decreased somewhat, but it has increased the number of its investigations, increased the average number of cases it refers to the Attorney General's Office (AG) and has slightly increased the average number of disciplinary actions (accusations) it takes each year (average of 3 cases per year.) While the overall average cost per disciplinary case is higher than it was four years ago, it has decreased in the past three years. However the overall average cost of disciplinary investigations and experts has almost doubled, while the average cost per case referred to the AG has decreased. The average time frame from opening to completion of an investigation has increased, while there has been a decrease in the number of days it takes to close cases that have been referred to the AG. The Board first promulgated regulations to issue administrative citations and fines in 1999 – with the fines ranging from $50 to $2500 per violation. The Board does not have a diversion program. Pursuant to the Board's disclosure policy the Board discloses all disciplinary cases following the filing of an accusation by the AG.

Significant legislative change. Since the Board's last sunset review the scope of practice of licensed optometrists was significantly expanded by the enactment of SB 929 (Polanco, Chapter 676 – Statutes of 2000) which became effective this past January. That bill specified additional diseases and conditions optometrists may treat (in particular, certain types of glaucoma) with specified medications. The bill provided requirements for mandatory consultation and referral by an optometrist to an ophthalmologist in specified circumstances, and authorized the Board to certify a TPA certified optometrist to perform lacrimal irrigation and dilation of patients over age 12, provided the optometrist has completed at least 10 of the former procedures under the supervision of an ophthalmologist. The bill authorized the Board to certify a TPA optometrist to treat primary open angle glaucoma in patients over the age of 18, provided the optometrist has completed specified educational requirements and has provided treatment for at least two years to at least 50 glaucoma patients in a collaborative relationship with an ophthalmologist, as

specified. Further, the bill also specified additional duties that an unlicensed assistant may perform under the direction responsibility and supervision of an ophthalmologist or optometrist.

CURRENT SUNSET REVIEW ISSUES

BOARD POWERS, DUTIES and COMPOSITION ISSUES

ISSUE #1: The Board has been unable to hold one regular business meeting in the past year, and problems and concerns regarding the management of the have been raised by the Board's three public members.

Question #1 for the Board: *Why has the Board had problems this past year in obtaining the necessary quorum to fulfill its statutory responsibility to conduct business and administer the optometry licensing laws? What business items or responsibilities has the Board been unable to perform as a result of its inability to hold regular business meetings (e.g., licensee reinstatements, examinations, promulgation of regulations, enforcement)? Is the Board capable, in the foreseeable future, of holding regularly scheduled meetings on a quarterly basis to conduct its normal business? If not, why? If not, what can be done so that the Board can properly function? How many committees does the Board have, who appoints their chair and members, how many members are on each committee, and how often did they meet during the past year? Can other Board members participate on committees to which they have not been appointed?*

What is the response to the concerns and problems raised by the Board's three public members in their Sunset Review Minority Report? Given the explicit dissatisfaction of the Board's three public members with the operation of the Board – what actions has the Board taken or recommended be taken to address the concerns raised by the public members? Has the Board, its members or its executive officer contacted the Department of Consumer Affairs or the Governor's Office to request that the vacancies on the Board be filled by appointment? If so, when and what has been the response to date? What should be done if the Board continues to be unable to perform its statutory administrative responsibilities?

Background: The Board's last regular business meeting was held over a year ago, on December 11 & 12 in 2000. A schedule sent to all Board members in January listed the proposed schedule of dates for four regular Board meetings in 2001 (March, June, September, and November), as well as one special hearing on a proposed regulation to adopt Part III of the National Board of Examiners in Optometry (NBEO or national exam) in lieu of the Board-administered practical exam in optometry. However, during 2001, the only meetings at which the Board could obtain the necessary attendance of sufficient members to meet its 6-member quorum requirement was its February 15 regulatory hearing on adoption of the national exam and one special meeting on August 29, brokered by the Department of Consumer Affairs, just to deal with submission of the Board's Sunset Review Report and to approve the Psychometric Audit of the national exam so

that it could be used for the Board's next licensing examination scheduled for January 2002. [Note: The terms of two licensee members of the Board expired in June of 2001, leaving the 9-member Board with a bare quorum of 6 members - 3 licensee & 3 public members.]

A meeting of Board members held in July was only a committee meeting since there was an absence of a quorum. The Board's November 16-17 meeting was reschedule to November 30 – December 1 to accommodate conflicts in Board members' schedules. However, that meeting had to be cancelled last week following notification by the Board's three public members that they would not attend, citing an absence of an opportunity to have input to the meeting agenda or to have reviewed a preliminary agenda prior to it being sent out.

The Board's "official" Sunset Review Report was adopted by a majority board vote at its August 29 special meeting and submitted to the JLSRC on September 1. However, citing disagreement with the manner in which the August meeting was conducted, the Board's three public members submitted a Sunset Review Minority Report dated September 17, 2001, in which they expressed their concerns both with the August meeting and with problems they believe have occurred with the management and operation of the Board over the past several years. A summary of their concerns or problems with the Board were:

- Board members are not provided with accurate or sufficient information in a timely manner on which to make their decisions.
- No board meetings were conducted for approximately 10 months in 1999.
- Public members' repeated requests for a board newsletter received no response until the August 2001 board meeting, and public board members' work on newsletters was never published.
- The board has failed to promulgate regulations to implement the provisions of SB 929 (Polanco, Chapter 676 – Statutes of 2000) which significantly expanded the scope of practice of optometrists and optometric assistants.
- It took many board meetings and memos to overcome the objections of licensee board members and the Executive Officer to set up a toll-free telephone number for the board.
- The board's committees are run by the board's Executive Officer and staff, not the committee's board members, and public board members are not appointed to nor allowed to provide input to meaningful board committees.
- Board business (e.g., meeting minutes, agendas, expense reimbursement claims) is not conducted in a timely fashion.
- Board members are not provided with adequate information about nor included in the Board's enforcement responsibility or its Enforcement Committee, and there has been no closure regarding recommendations that have been made by the public members.
- Board decisions (e.g., re adoption of the national licensing exam) are not based on all the necessary information but rather based on the personal interests and opinions of particular licensee board members.
- Board decisions only reflect the interests of the Board's licensee member majority; board composition should be changed to eliminate the licensee member majority.
- Board meetings and hearings are not adequately publicized, are not held in convenient or publicly accessible locations, are scheduled for longer than is necessary, and the agendas inaccurately reflect the timing and length of agenda items.

While the Board's staff has continued to conduct the day-to-day business of the Board, the Board itself has been confronting an apparent stalemate between its licensee and public members in being able to meet and decide on policies, regulations, petitions for license reinstatements, or recommended decisions in disciplinary cases.

ISSUE #2: Should the composition or membership qualifications of the Board be changed?

Question #2 for the Board: *Should the ratio of licensee to public member be changed to increase the representation by public members? If the public member representation is increased, should it be done by replacing a licensee member or members (perhaps through attrition as a position becomes vacant) or by increasing the size of the Board? What are the Board's conflict of interests provisions for the selection and participation of its licensee and its public Board members? Are these adequate to insure that the Board operates in the public's interest rather than being influenced by their own personal interests? Should they be made more stringent to avoid either the appearance or reality of improper self-interest?*

Background: During the Board's prior Sunset Review in 1997-98, the Department of Consumer Affairs recommended increasing the public membership on the Board to improve its balance consistent with the Department's general recommendations that its regulatory boards should have an odd number of members and a public member majority. The staff of the JLSRC staff concurred with the Department and recommended adding one more public member and removing one of the optometrist members – retaining a 9-member Board with 5 public and 4 licensed optometrist members. However, neither the Board nor the JLSRC itself agreed with that staff recommendation and the JLSRC decided **not to adopt** that recommendation on a vote of 2-3.

In support of its recommendation in 1997/98, the JLSRC staff wrote:

> "The Department and Committee staff believe the current composition of the nine-member Board of Optometry, 6 optometrists and 3 public members, is *overbalanced toward optometrist members*. The Joint Committee may wish to consider converting one of the optometrist positions to a public member.
>
> This recommendation is based on the belief that a regulatory board dominated by professional members (a 2-to-1 majority in this instance), may tend to place greater emphasis on issues of competence (e.g., examinations, continuing education, expanded scope of practice) and correspondingly less emphasis and resources on consumer education/information, and enforcement. And, while it generally functions efficiently, the Board of Optometry may be a case in point."

This year the Board's three public members have recommended that the composition of the Board be changed to reduce the number of licensed optometrist members, and to add either a licensed ophthalmologist or public members. The public members believe that the Board's

actions are controlled by the interests of its licensee member majority, rather than the public interest.

Further, the Board of Optometry is required to hold at least one meeting a year at which its licensing exam must be given. However, the Board generally schedules four meetings a year to be held in both Northern and Southern California. The nine-member Board (six licensee and three public members) has a statutory quorum requirement of six members, currently has three licensee-member vacancies (one since June 2000 & two more since June 2001), and has had difficulty in the past year obtaining a quorum to conduct its meetings.

Based upon the apparent stalemate between the Board's public and licensee members, the JLSRC may want to consider changing the composition of the Board and the qualifications for its members. Some state regulatory boards within the Department of Consumer Affairs have additional requirements or limitations on the qualifications of its members. These can include that licensees represent particular backgrounds within the profession or types of practice, that conflict of interest provisions be more far reaching, and in an exceptional case that licensees of another profession be included on a Board (e.g., Respiratory Care Board.) The purpose of these additional requirements is to assure that the Board has the benefit of a broad cross-section of professionals involved in a board's regulation, that professionals working in different circumstances are represented, and that members are free of even apparent personal sources of conflict of interest. For this board, such additional requirements might include assuring that its licensed optometrist members represent both licensees working in private practice as well as those working as employees in corporate settings.

Regarding the Board's *efforts to protect consumers* since its last sunset review, the Board has adopted a regulation to require that optometrists post a conspicuous notice in their offices that federal law requires that patients be given a copy of their spectacle (eyeglasses) prescription, but that the law does not require the optometrist to release a contact lens prescription. Board staff have recommended that the Board go further and adopt a state regulation to provide patients with the right to obtain their contact lens prescription upon request, unless there are significant medical reasons not to do so. The Board's attorney has advised that the Board has the necessary statutory authority to adopt such a regulation. This regulatory proposal is pending before the Board for action. Also, the Board has instituted a toll-free "800" public telephone number for the Board.

In the area of *enforcement*, the Board's statistics show that 46% of its complaints come from consumers and that "unprofessional conduct" is the most often alleged violation. "Unprofessional conduct" includes allegations of patient abandonment, breach of confidentiality, failure to release records, unethical practices, theft, or rendering of unauthorized professional services. The Board's report did not breakdown its enforcement statistics by type, but show that while the number of complaints have been declining over the past four years (from 308 to 240), the number referred for investigation have increased (from 44 to 66 in 2000/2001), the number of accusations filed has varied from 2 in 1997/98 to 12 in 1998/99 and back down to 3 in 2000/01, and the number of formal disciplinary actions taken have declined from 12 in 1997/98 to 7 in 2000/01.

BUDGETARY ISSUES

ISSUE #3: The August 2001 Department of Finance fiscal controls audit of the Board found several deficiencies in the Board's internal fiscal controls and made recommendations to correct them.

Question #3 for the Board: *What deficiencies did the audit reveal and what was the Board's response? Does the board foresee any problems with rectifying the deficiencies disclosed by the DOF audit and carrying out the recommendations with which it has concurred? Will the DOF respond to the Board's written response to the audit, for example, in its final audit report? Is the Board required to provide subsequent reports to the DOF regarding the implementation of the recommendations? Have there been any discussions between the Board and the Department of Consumer Affairs regarding whether a "program audit" will be conducted? Over the past few years, what information has been provided to board members regarding the Board's budget, expenditures and revenues? In what form has this information been provided and at what frequency?*

Background: All three public Board members have expressed concerns regarding the management of the Board and inability to obtain regular information regarding the Board's budget, expenditures, and revenue.

At the request of the Department of Consumer Affairs, the Department of Finance (DOF) pursuant, to an interagency agreement recently conducted an audit review of the Board's internal fiscal controls. The DOF's draft audit report made several findings and recommendations pertaining to the Board's need to take physical inventories of and tag board property, maintain subsidiary property ledgers, submit monthly bank statements on a timely basis, process purchase invoices in a timely manner, and maintain independent leave balance reports. In its response to the DOF, the Board agreed with the audit findings and committed to taking corrective actions steps to comply with the audit recommendations. The audit did not review programmatic controls over the Board's service quality and operational efficiency – including management's effectiveness to accomplish desired performance through effective strategic planning, program budgeting, supervision, and fiscal discipline.

ISSUE #4: The Board's reported fund reserve exceeds its statutory maximum. Is the Board satisfactorily responding to this situation?

Question #4 for the Board: *Has the Board reconciled its fund analysis figures with those of the department? Are the amounts reflected in the Board's report accurate and, if not, what are the actual figures? When will the Board's reserve meet the statutory six-month limit? Is there a need to decrease licensing fees or increase the Board's base budget for any items?*

Background: The Board reports that it had a fund reserve at the end of the 2000/2001 fiscal year equaling 11.6 months operating expenses and has a statutory limit of six months reserve.

The Board reported that the Department of Consumer Affairs' fund analysis reflected a reserve level of only 6.5 months at the end of the 2000/2001 fiscal year, and that the Board would. The Board indicated that it will do an additional analysis, given the expenditure and revenue patterns, to determine whether a decrease in renewal fees is warranted.

LICENSURE ISSUES

ISSUE #5: Has the Board satisfactorily responded to the recent legislative expansion in the scope of practice for both optometrists and unlicensed optometry assistants?

Question #5 for the Board: *What was the Board's involvement in developing the provisions of SB 929 (Polanco, Chapter 676 – Statutes of 2000) prior to its enactment? What actions has the board taken in order to implement SB 929? Is the board proposing to adopt regulations regarding the glaucoma certification provisions of the bill? If so, what is being proposed? If not, why, and is the board proposing any less formal action (e.g., newsletter article, notice to licensees, etc.) regarding the bill's implementation? How did SB 929 expand the duties that unlicensed optometric and unlicensed medical assistants are allowed to perform? What specific tasks are involved in those duties? Why does the board believe that its proposed regulation on this will assure that those duties are performed in a safe and competent manner? What are the chronology and the status of that regulation? What process did the board use to determine whether regulations are necessary to implement this statute? What is the board's response to arguments that further clarification or specificity by the board is required to properly implement this statute with respect to either its glaucoma or optometric assistant provisions?*

Background: The three public members in their Minority Report contend that the board has failed to propose adopting regulations that are necessary regarding the provisions of SB 929 (Polanco – Chapter 676 of 2000) that provided for the board's certification of optometrists to independently treat glaucoma following collaboration with ophthalmologists in the treatment of 50 glaucoma patients. Regulations regarding the expanded scope of practice of unlicensed optometric assistants have also been proposed but the Board has not taken any formal action to promulgate such regulations. (Note: The Board has not been able to hold a regular Board meeting to do so since December of 2000.)

One public board member has expressed that her request to be appointed to the regulation committee was not approved by the Board's President who makes the appointments to the Board's various committees. Only one licensee member was appointed to the Board's standing Regulations Committee for 2001. However, a special committee composed of that public member, the licensee member of the standing regulations committee and staffed by the Board's Executive Officer, was appointed by the Board's President on November 7, 2000 to discuss the implementation of SB 929 and develop recommendations for its implementation. That special committee's recommendations were presented at the Board's December 1, 2000. In response to those recommendations, the Board decided to have its staff develop of form for the glaucoma collaboration provision of the bill, have staff draft proposed language re performance of duties

by an unlicensed optometric assistant and bring it back to the Board for consideration, have staff research the issue of the definition of "consultation" as used in the bill, and took no action on two other items. Except for development of the form by staff, the Board has not been able to meet to pursue the other implementation actions it had decided it would pursue.

EXAMINATION ISSUES

ISSUE #6: The Board has voted to eliminate using its own licensing examination in favor of using the National Board of Examiners in Optometry (NBEO) examination.

Questions #6 for the Board: *What assessment or review did the Board do that led to its decision to accept passage of all portions of the National Board of Examiners in Optometry examination (NBEO or national exam) in lieu of requiring license applicants to pass a California developed and administered practical licensing exam? Prior to its vote to adopt the national exam, how did the Board establish that the NBEO exam properly tested California's license applicants to assure their minimum competency to practice within their scope of practice in California? What was the chronology of events involved with the Board's adoption of a proposed regulation to use the national exam? What prompted the recent audit of the national exam by the Board, what were the findings of that exam audit? What is the current status of that regulation? When is the Board's next licensing exam and when is adoption of the national exam expected to occur? Will a change in the examination fee paid by license applicants be necessary as a result of adoption of the national exam?*

Background: The public board members, in their Minority Report, have expressed concerns that the Board's decision to move to adopt the national exam was prompted by the licensee member of the Board who has been in charge of California's exam but will be leaving the Board in the near future and is involved with the administration of the national exam. Following a formal regulatory hearing last February, the Board adopted a regulation – now pending approval – which would accept all parts of the NBEO exam in lieu of the Board-administered exam, as is currently done by 37 other states. Currently the Board requires passage of Parts I, II, and the Clinical Skills portion of Part III of the national exam plus passage of the Board's own patient management and laws and regulations exams. In essence, the proposed exam would now add passage of the remainder of Part III of the national exam instead of the Board's Patient Management exam – but still require license applicants to pass the California laws and regulations exam.

Following submittal of the Board's proposed regulation to the DCA, the DCA pointed out that an audit should be performed on the national exam to determine if it met California's standards for exam administration. That Board's regulatory proposal was held back pending the completion of the audit. The Board contracted to have the audit performed and the audit report was submitted on November 19. The audit concluded, with reservations, that the national exams are valid measures of optometric competencies, but made recommendations that were believed would enhance the validity of the examinations. The Board's sunset report states that the Board will

consider moving in the direction of online license renewal if a pilot project in which the Board of Registered Nursing is involved proves successful.

CONTINUING COMPETENCY ISSUES

ISSUE #7: Should the criteria and process for approving mandatory continuing education courses and providers be changed. In particular, should all courses and course providers that are approved by the Medical Board of California for mandatory continuing medical education also qualify for mandatory continuing education for licensed optometrists?

Question #7 for the Board: *What criteria does the Board use for its approval of education courses and providers for mandatory continuing education? Why are continuing education courses officially sponsored or accredited by any accredited school or college of optometry given blanket pre-approval? What assurances are there that such courses will in fact meet the criteria for continuing education courses approved by the Board (but not made applicable in regulation to courses by schools/colleges of optometry?) Will coursework on subject areas that are studied as part of the curriculum of an approved school of optometry (e.g., general human diseases or conditions not specifically involving the eyes or related structures) also qualify for approval as continuing optometric education?*

Background: The optometry licensing laws require the Board to adopt regulations that require, as a condition of renewal, that all licensees submit proof satisfactory to the Board that they have informed themselves of the developments in the practice of optometry occurring since the original issuance of their licenses by pursuing one or more courses of study satisfactory to the Board or by other means deemed equivalent by the Board. Concerns have been raised that the quality of CE courses has declined since completion of CE became mandatory – essentially insuring a "captive audience" of persons who must take approved CE. And it has been proposed by at least one licensee that all mandatory CE that has been approved by the Medical Board of California for physicians should also be accepted as qualifying for the mandatory CE requirements in optometry – the contention being that medically-related coursework is relevant to the practice of optometry and constitutes a required part of the approved educational coursework for obtaining an initial license.

To renew a license, an optometrist must pass 40 hours of continuing optometric education (CE) every two years or 50 hours if the optometrist is certified to use therapeutic pharmaceutical agents (TPAs). TPA-certified optometrists must fulfill 35 of their required 50 hours on the diagnosis, treatment and management of ocular disease as follows: 12 hours on glaucoma, 10 hours on ocular infections, 5 hours on inflammation and topical steroids, 6 hours on systemic medications, and 2 hours on the use of pain medications. Apart from the above mandatory CE requirements, the Bard may adopt regulations to require licensees to maintain current certification in cardiopulmonary resuscitation.

In addition, Board regulations require each licensee to complete 20 hours of formal CE course work approved by the Board within the year immediately preceding the renewal deadline. No more than 4 hours of course work can be in the area of patient care management, and courses in business management shall not be approved. The regulations limit use of specified alternative methods for meeting the CE requirements to one half of the 20 hours of required course work. The regulations require that all licensees maintain current certification in cardiopulmonary resuscitation (CPR) from approved providers

CE programs that have been approved by regulation as meeting the Board's required standards include: (1) CE sponsored or accredited by any accredited school or college of optometry, (2) CE offered by any national or state affiliate of the American Optometric Association, the American Academy of Optometry, or the Optometric Extension Program, or (3) CE approved by the International Association of Boards of Examiners in Optometry known as COPE (Council on Optometric Practitioner Education). Further, CE meeting the criteria specified below may be approved by the Board after submission of a program, schedule, topical outline of subject matter, and curriculum vitae of all instructors to the Board's Executive Officer at least 45 days prior to the date of the program. The criteria for Board approval are: (1) Whether the program is likely to contribute to the advancement of professional skill and knowledge in the practice of optometry, (2) Whether the speakers, lecturers and others participating in presentation are recognized by the Board as being qualified in their field, (3) Whether the proposed course is open to all licensees, and (4) Whether the CE provider agrees to maintain and furnish records of course content and attendance as the Board requires for a period of at least three years from the date of the course.

ENFORCEMENT ISSUES

ISSUE #8: The Board reports an increase in its enforcement activity and related expenditures since its last sunset report in 1997, but also reports an increase in the amount of time it takes to complete a disciplinary case. Further, the Board has had to seek deficiency funding for enforcement purposes over the past two fiscal years.

Question #8 for the Board: *What accounts for the increase in both enforcement activity and delays in completion of the pre-accusation and post-accusation time frames? Does the pre-accusation time frame include time that the case is still at the Board as well as after it has been referred from the Board to the AG but before an accusation is filed? If so, does the Board have data that breaks out the time cases are at each stage? What does the Board believe can be done to reduce these increases in the time it takes to complete its disciplinary cases? In what years since its last sunset review have the Board's expenditures for enforcement exceeded its budgeted appropriation? If so, in which areas of enforcement did this occur? In what years did the Board submit a deficiency request for additional expenditure authority (appropriation) and what was the cause of the deficiency (ies)? Does the Board anticipate the need for a deficiency request this year? Has the Board's budget for enforcement been increased? Does the Board need an increase in its base budget, particularly for enforcement? If so, what would those additional monies be used for?*

Background: The three public board members in their Minority Report expressed concerns that they are not satisfactorily informed, or are misinformed, regarding the Board's enforcement program and related budget – which led to their decision to drop further investigation in one particular disciplinary case.

The Board's report shows a decline in complaints made to the Board, an increase in the number of investigations initiated, an increase in the average number of cases referred to the Attorney General's Office (AG) for initiation of formal disciplinary action, and a slight increase in the average number of disciplinary actions taken. The Board reports that it has increased its expenditures for enforcement by 15%, from an average of 41% in 1997 to 56% in 2001. However, during that same period the average amount of time it takes to process complaints, investigate and process complaints has increased from 805 days (1997/98) to 914 days (2000/01), or an increase of 109 days. The bulk of that increase appears to occur after the investigation is completed and either prior to the filing of an accusation by the AG or following the filing of the accusation but before the conclusion of the case ("post-accusation").

The Board has experienced increased disciplinary workload that resulted in the Board filing Deficiency Requests to obtain deficiency funding (additional funds appropriated beyond amount initially budgeted) over the past two fiscal years (1998/99 & 1999/2000.) In particular, as has been the case with some of the other licensing boards in the Department of Consumer Affairs, the deficiency resulted in part due to unanticipated Attorney General enforcement costs that had led to expenditure of all the funds that had been budgeted and appropriated for that purpose in those two fiscal years.

CONSUMER EDUCATION/INFORMATION AND SATISFACTION

ISSUE #9: There is still relatively high dissatisfaction with the Board by those who file complaints, but the Board has made significant improvements in making its existence known to and communicating with complainants.

Question #9 for the Board: *Please explain what efforts the Board has made to improve communication with complainants, why it believes that dissatisfaction with the outcome of the consumers' complaints is still relatively high, and what other improvements the Board intends to make to provide better overall service to complainants.*

Background: The satisfaction survey of complainants conducted by the Board for its prior 1997/98 sunset review indicated that 26% of respondents were satisfied that the Board's existence was well known, 79% were satisfied with knowing where to file a complaint, 55% were satisfied with the outcome of their complaint case, and 72% were satisfied with the Board's overall service or effectiveness. The complainant survey conducted by the Board as a part of this year's sunset review process shows that for 1999 & 2000, 100% of respondents were satisfied

with knowing where to file a complaint and whom to contact, 60% (1999) & 75% (2000) were satisfied with the final outcome of their complaint, and 80% (1999) and 66% (2000) were satisfied with the overall service provided by the Board.

ISSUE #10: Should the Board be doing more to publicize its existence and regulatory role, and should it be doing more to educate and inform the public regarding the services provided by optometrists?

Question #10 for the Board: *How does the Board publicize its existence, its regulatory role over optometrists, and its public board meetings. What process is used to select board meeting locations and sites? Could the Board select locations or sites that are more accessible to the public, particularly the disabled? What is the status of the Board's newsletter? What information does the Board provide the public and how does it provide that information? What are the most frequent sources of consumer complaints to the Board? Does the Board plan to provide information, in pamphlet form and on its website, regarding subjects such as what constitutes a thorough eye examination and what they should know in buying spectacle or contact lenses?*

Background: The three public members in their Minority Report contend that the Board has failed to adequately publicize the Board's meetings, make those meetings easily accessible, or provided newsletters to its licensees and others on the Board's mailing lists. The Board maintains a website on the Internet that provides information about the Board, the requirements of the optometry licensing laws, licensees, and optometry. The Board's sunset report states that the Board will consider moving in the direction of online license renewal if a pilot project in which the Board of Registered Nursing is involved proves successful. The Board does note that the Internet could be further utilized to improve Board service to consumers by including information on consumer interest subjects such as purchasing contact lenses and spectacles (eyeglasses), and what constitutes a comprehensive eye examination. The Board has produced a consumer information pamphlet in the past but it has not been updated in recent years to include changes in the law or additional relevant information.

4.

FINAL RECOMMENDATIONS OF THE JOINT LEGISLATIVE SUNSET REVIEW COMMITTEE AND THE DEPARTMENT OF CONSUMER AFFAIRS

ISSUE #1. (CONTINUE REGULATION OF THE PROFESSION?) Should the licensing and regulation of optometrists be continued?

Recommendation #1: ***The Joint Committee and the Department recommend that profession of optometry continue to be regulated.***

Comments: Due to the highly technical procedures performed by optometrists and the health and safety implications for consumers, the Department and the JLSRC recommend continued regulation of the optometric profession.

ISSUE #2. (CHANGE BOARD COMPOSITION?) Should the composition or membership qualifications of the Board be changed?

Recommendation #2: ***The Joint Committee and the Department recommend two additional public members added to the Board.***

Comments: The Board currently consists of nine members, six professional members and three public members. The majority of the boards under the purview of the Department have a balanced composition with an equitable number of professional and public members. Unlike these other boards, the Board of Optometry has a two-to-one ratio of professional to public members. It has been argued that this professional super majority necessarily results in professional bias, and less focus on consumer protection.

Public participation on regulatory boards ensures a balanced approach to decision-making, and enhances public protection. In recent years, the JLSRC has expanded the number of public members on DCA regulatory boards. Public members have been added to the Accountancy, Contractors, Pharmacy, Podiatry, Psychology, Respiratory Care, and Veterinary Medical Boards through sunset review legislation.[30]

[30] SB 133 (Chapter 718, Statutes of 2001), SB 2029 (Chapter 1005, Statutes of 2000), SB 827 (Chapter 759, Statutes of 1997), SB 1981 (Chapter 736, Statutes of 1998), SB 1983 (Chapter 589, Statutes of 1998), SB 827 (Chapter 759, Statutes of 1997), respectively.

If the Board is sustained, the Department and the JLSRC recommend adding two additional public members, appointed by the Governor, for a total of eleven members (six professional, five public). This new composition would provide more consumer representation while continuing to maintain the expertise needed for technical regulatory and enforcement issues. Two additional Board members would not substantially increase a Board's operational costs.[31]

ISSUE #3: (RESOLVE CONFLICTS BETWEEN PROFESSIONAL AND PUBLIC MEMBERS?) What actions should the Board take to resolve some of the ongoing problems between professional members and public members?

Recommendation #3: ***The Joint Committee and the Department recommend that the Board needs to continue its efforts to reconcile conflicts between professional and public members.***

Comments: As reported to the Department and the JLSRC and detailed in the "Minority Report", the Board's public members argue that they are treated differently than the professional members, suggesting the potential for a two-tiered approach by the Board staff in addressing the concerns of the public members.

As evidenced by the sunset review "minority report" submitted to the JLSRC by the Board's public members (who constitute one-half of the Board), significant conflict exists between the professional and public members of the Board of Optometry. Further evidence of this conflict is the Board's inability to meet due to the unwillingness of the public members to attend meetings under current conditions. Although the Board has been making disciplinary decisions via mail ballot, the inability of Board leadership to address and resolve the issues precipitating the impasse is a matter of concern. The absence of Board meetings undermines the purpose of the Board—which in part is to engage in regular public discourse.

This impasse and consistent inability to resolve differences is unprecedented. The Department has been asked on more than one occasion to facilitate conversations between the Board's two factions so that a Board meeting may be convened. The Department believes that this is the responsibility of Board leadership – its presiding chair and executive officer. Nonetheless, the Department has provided guidance and recommendations on how to overcome the intransigency of the Board members.

It was recommended that professional facilitators or conflict mediation experts be brought in to resolve the conflict so that the Board can carry out its business. While the Department was encouraged by the Board's recent decision to do so, it is disappointed by the plan engaged to effectuate conflict mediation. The Department's profound concerns about Board leadership remain.

[31] Average annual travel and per diem costs per member are approximately $2,500.

ISSUE #4: (COMPLY WITH RECENT AUDIT?) What corrective steps should the Board take to comply with deficiencies found during a recent audit conducted by the Department of Finance?

Recommendation #4: ***The Joint Committee and the Department recommend the Board should comply with corrective steps recommended in the Board's recent audit.***

Comments: The Department and JLSRC recommend that the Board continue to take the corrective steps needed to comply with the Board's recent audit, conducted by the Department of Finance (DOF). At the request of the Department, the DOF, through an interagency agreement, conducted an audit review of the Board's internal fiscal controls. The DOF's draft audit identified several areas needing improvement. These included the need to submit monthly bank statements on a timely basis and process purchase invoices in a timely manner, among others. The Board agreed with the audit findings and recommendations for remedial behavior in its response to the DOF. The Department would like to underscore the importance of these corrective steps and the need to have sound internal fiscal controls in place prior to the next sunset review cycle.

ISSUE #5: (DEVELOP STANDARDS FOR UNLICENSED ASSISTANTS?) Should the Board adopt supervision and training standards for unlicensed optometric assistants?

Recommendation #5: ***The Joint Committee and the Department recommend that the Board should conduct an occupational analysis for optometric assistants to identify the tasks they will perform, and the attendant training and skill level required. An occupational analysis should be developed before unlicensed assistants are permitted to engage in practices that until now required licensure as an optometrist. Following the occupational analysis, regulations clarifying the level of training and supervision of assistants should be promulgated.***

Comments: Senate Bill 929 (Chapter 676, Statutes of 2000) expanded the scope of practice for optometrists and expanded the duties that an unlicensed assistant may perform under the direct responsibility and supervision of an optometrist. This is a dramatic change in the delivery of optometric services. The provisions of SB 929 reclassified technicians, who previously were only authorized to fit contact lenses, to assistants who can perform various testing procedures including glaucoma testing, visual perception testing, measurement of the thickness of the cornea, screening of the corneal curvature, administering topical agents, and performing sonograms to measure the length of the eye and structures of the eye, generally used for surgical procedures and may involve direct contact with the eye. Clearly, this is a significant expansion of the tasks that unlicensed assistants were able to perform prior to the passage of SB 929, and consumers should not be placed at risk until duties of these assistants are clarified and regulations are adopted clarifying the level of training and supervision. Specifically, the Board needs to establish standards to ensure that unlicensed assistants demonstrate adequate knowledge and skill. In the absence of clarifying regulations, individual practitioners in the field could interpret the law in a variety of ways. To protect consumers, the Board should expedite the adoption of clarifying regulations.

ISSUE #6: (CONTINUE WITH THE CURRENT BOARD?) Should the profession of optometry continue to be regulated by the current Board, or should the Board be reconstituted, or become a bureau under the Department of Consumer Affairs?

Recommendation #6: ***The Joint Committee recommends that current membership of the Board should be allowed to sunset.***

Comments: Since the last sunset review this Board has struggled with scope of practice issues, criticism of its enforcement efforts, an impasse between Board members that has effectively rendered the Board impotent, and a persistent perception that the profession exercises inordinate control of the Board. The Department's Deputy Director for Board Relations was called in to mediate Board Member conflict and facilitated the Board's September meeting. In 1999 the Director intervened in a Board dispute with the Department of Justice which has severely impaired the Board's relationship with the Department of Justice's licensing division. The Department is troubled by the lack of leadership exhibited at the Board and has shared those concerns with Board Members and the Executive Officer.

Following criticism that the Board was unlawfully permitting optometric exams to be conducted by unlicensed assistant personnel, the Board originally responded that this was common practice, and there was no intention to discipline optometrists delegating this function. When the Department suggested legislation to review this practice, the Board indicated previous legislative efforts had not been successful, and legislation would not be pursued to clarify the permission of this practice. Nonetheless, and fully aware of the Department's interest in resolving the matter, the optometry scope of practice bill, Senate Bill 929 (Chapter 676, Statutes of 2000), was amended late in the session to permit unlicensed assistant personnel to perform optometric exams. While this may well be an appropriate contemporization of the practice act, it was achieved with virtually no public discussion, and without even cursory notification to the Department.

In 2001, the Department worked with the Board and the Office of Examination Resources (OER) to evaluate the national exam and it's appropriateness for use in California. However, the Board did not conduct an independent audit of the national exam, in spite of the significant changes in their scope of practice that occurred as a result of SB 929, until the Department intervened.

M e m o r a n d u m

To: Boards Subject to Review in 2012-2013

From: Senator Curren D. Price, Jr.

Date: March 23, 2012

Subject: Request for Information and Issues to be Addressed for 2012-2013 Oversight Review

---

This is to inform you that the Senate Committee on Business, Professions and Economic Development (Committee) will begin its oversight review of the following boards in the fall of 2012:

Athletic Commission
Barbering and Cosmetology Board
Guide Dogs for the Blind
Interior Design Certification Organization
Medical Board of California
Occupational Therapy Board
Optometry Board
Osteopathic Medical Board
Naturopathic Medicine Committee
Registered Dispensing Opticians
Respiratory Care Board
Speech-Language Pathology, Audiology, Hearing Aid Dispensers Board
Veterinary Medical Board

You are also receiving by email attachment a Report Form that should be completed and submitted to the Committee by November 1, 2012. Last year the Report was significantly revised and has been further modified this year. The revisions are intended to simplify the reporting process for the boards, and focus more clearly on issues of

interest to the Committee. The first sections of the Report provide an overview of the board's current regulatory program, and gives pre-formatted tables and charts to be completed by the board. The latter sections focus on responses by the board to particular issues raised by the individual board or that are raised by the Committee.

We ask that you complete the tables and charts and provide the appropriate statistical information for the fiscal years indicated. Please respond to all questions in the Report. In the event that some information may not pertain to your particular board, please note it on your response, but be sure to include information that is relevant to your activities and programs.

In completing your Report, please note the following sections:

> Section 10 – Board Action and Response to Prior Sunset Issues. This should reflect the board's response to each individual issue and recommendation that was raised by the Committee during the prior review of the board.
>
> Section 11 – New Issues. This the board's opportunity to raise new issues and make recommendations to the Committee. The Committee may also have additional issues that the board will need to address during this review. We encourage the board to request a meeting with Committee staff to review possible issues to be addressed within this document for the 2012 review.

Along with the Report Form, you are also being sent a *Guide for Completing Tables in the Oversight Review Questionnaire*. Most of the tables may be completed from data in standard reports that the board already receives. If your board does not use the Department's report and data processes, please report information using the definitions given in the Guide.

Each board should submit 15 printed copies of its final Report to the Committee, and also submit an electronic copy to the Committee (you may submit a PDF version, but we also request a MS-Word copy).

Committee staff will be responsible for reviewing and analyzing information provided by the board, and for preparing a background paper with issues to be addressed by the board and by interested parties during our public hearings to be held early in 2013.

We expect to announce the dates for the hearings sometime in December. We would like to request that once the hearing dates are set, that the board notify (by mail or email) its interested parties list of organizations, groups, or individuals who regarding the Committee's public hearings.

If you have any questions about the attached documents or the review process, please contact G. V. Ayers of my staff at (916) 651-4104.

[BOARD NAME]
BACKGROUND INFORMATION AND OVERVIEW OF THE CURRENT REGULATORY PROGRAM
As of [date]

Section 1 – Background and Description of the Board and Regulated Profession

Provide a short explanation of the history and function of the board.[1] Describe the occupations/profession that are licensed and/or regulated by the board (Practice Acts vs. Title Acts).

1. Describe the make-up and functions of each of the board's committees (cf., Section 12, Attachment B).

Table 1a. Attendance			
[Enter board member name]			
Date Appointed:	[Enter date appointed]		
Meeting Type	**Meeting Date**	**Meeting Location**	**Attended?**
Meeting 1	[Enter Date]	[Enter Location]	[Y/N]
Meeting 2	[Enter Date]	[Enter Location]	[Y/N]
Meeting 3	[Enter Date]	[Enter Location]	[Y/N]
Meeting 4	[Enter Date]	[Enter Location]	[Y/N]

Table 1b. Board/Committee Member Roster					
Member Name (Include Vacancies)	Date First Appointed	Date Re-appointed	Date Term Expires	Appointing Authority	Type (public or professional)

2. In the past four years, was the board unable to hold any meetings due to lack of quorum? If so, please describe. Why? When? How did it impact operations?
3. Describe any major changes to the board since the last Sunset Review, including:
   - Internal changes (i.e., reorganization, relocation, change in leadership, strategic planning)

[1] The term "board" in this document refers to a board, bureau, commission, committee, department, division, program or agency, as applicable. Please change the term "board" throughout this document to appropriately refer to the entity being reviewed.

- All legislation sponsored by the board and affecting the board since the last sunset review.
- All regulation changes approved by the board the last sunset review. Include the status of each regulatory change approved by the board.

4. Describe any major studies conducted by the board (cf. Section 12, Attachment C).
5. List the status of all national associations to which the board belongs.
   - Does the board's membership include voting privileges?
   - List committees, workshops, working groups, task forces, etc., on which board participates.
   - How many meetings did board representative(s) attend? When and where?
   - If the board is using a national exam, how is the board involved in its development, scoring, analysis, and administration?

Section 2 – Performance Measures and Customer Satisfaction Surveys

6. Provide each quarterly and annual performance measure report as published on the DCA website
7. Provide results for each question in the customer satisfaction survey broken down by fiscal year. Discuss the results of the customer satisfaction surveys.

Section 3 – Fiscal and Staff

Fiscal Issues

8. Describe the board's current reserve level, spending, and if a statutory reserve level exists.
9. Describe if/when a deficit is projected to occur and if/when fee increase or reduction is anticipated. Describe the fee changes (increases or decreases) anticipated by the board.

Table 2. Fund Condition

(Dollars in Thousands)	FY 2008/09	FY 2009/10	FY 2009/10	FY 2011/12	FY 2012/13	FY 2013/14
Beginning Balance						
Revenues and Transfers						
Total Revenue	$	$	$	$	$	$
Budget Authority						
Expenditures						
Loans to General Fund						
Accrued Interest, Loans to General Fund						
Loans Repaid From General Fund						
Fund Balance	$	$	$	$	$	$
Months in Reserve						

10. Describe history of general fund loans. When were the loans made? When were payments made? What is the remaining balance?

11. Describe the amounts and percentages of expenditures by program component. Use *Table 3. Expenditures by Program Component* to provide a breakdown of the expenditures by the board in each program area. Expenditures by each component (except for pro rata) should be broken out by personnel expenditures and other expenditures.

Table 3. Expenditures by Program Component

	FY 2008/09		FY 2009/10		FY 2010/11		FY 2011/12	
	Personnel Services	OE&E	Personnel Services	OE&E	Personnel Services	OE&E	Personnel Services	OE&E
Enforcement								
Examination								
Licensing								
Administration *								
DCA Pro Rata								
Diversion (if applicable)								
TOTALS	$	$	$	$	$	$	$	$

*Administration includes costs for executive staff, board, administrative support, and fiscal services.

12. Describe license renewal cycles and history of fee changes in the last 10 years. Give the fee authority (Business and Professions Code and California Code of Regulations citation) for each fee charged by the board.

Table 4. Fee Schedule and Revenue

Fee	Current Fee Amount	Statutory Limit	FY 2008/09 Revenue	FY 2009/10 Revenue	FY 2010/11 Revenue	FY 2011/12 Revenue	% of Total Revenue

13. Describe Budget Change Proposals (BCPs) submitted by the board in the past four fiscal years.

Table 5. Budget Change Proposals (BCPs)

BCP ID #	Fiscal Year	Description of Purpose of BCP	Personnel Services				OE&E	
			# Staff Requested (include classification)	# Staff Approved (include classification)	$ Requested	$ Approved	$ Requested	$ Approved

Staffing Issues

14. Describe any staffing issues/challenges, i.e., vacancy rates, efforts to reclassify positions, staff turnover, recruitment and retention efforts, succession planning.
15. Describe the board's staff development efforts and how much is spent annually on staff development (cf., Section 12, Attachment D).

Section 4 – Licensing Program

16. What are the board's performance targets/expectations for its licensing[2] program? Is the board meeting those expectations? If not, what is the board doing to improve performance?
17. Describe any increase or decrease in average time to process applications, administer exams and/or issue licenses. Have pending applications grown at a rate that exceeds completed applications? If so, what has been done to address them? What are the performance barriers and what improvement plans are in place? What has the board done and what is the board going to do to address any performance issues, i.e., process efficiencies, regulations, BCP, legislation?
18. How many licenses or registrations does the board issue each year? How many renewals does the board issue each year?

Table 6. Licensee Population

		FY 2008/09	FY 2009/10	FY 2010/11	FY 2011/12
[Enter License Type]	Active				
	Out-of-State				
	Out-of-Country				
	Delinquent				
[Enter License Type]	Active				
	Out-of-State				
	Out-of-Country				
	Delinquent				
[Enter License Type]	Active				
	Out-of-State				
	Out-of-Country				
	Delinquent				
[Enter License Type]	Active				
	Out-of-State				
	Out-of-Country				
	Delinquent				

[2] The term "license" in this document includes a license certificate or registration.

Table 7a. Licensing Data by Type											
	Application Type	Received	Approved	Closed	Issued	Pending Applications			Cycle Times		
						Total (Close of FY)	Outside Board control*	Within Board control*	Complete Apps	Incomplete Apps	combined, IF unable to separate out
FY 2009/10	(Exam)					-	-	-	-	-	-
	(License)					-	-	-	-	-	-
	(Renewal)			n/a		-	-	-	-	-	-
FY 2010/11	(Exam)										
	(License)										
	(Renewal)			n/a							
FY 2011/12	(Exam)										
	(License)										
	(Renewal)			n/a							
* Optional. List if tracked by the board.											

Table 7b. Total Licensing Data	FY 2009/10	FY 2010/11	FY 2011/12
Initial Licensing Data:			
Initial License/Initial Exam Applications Received			
Initial License/Initial Exam Applications Approved			
Initial License/Initial Exam Applications Closed			
License Issued			
Initial License/Initial Exam Pending Application Data:			
Pending Applications (total at close of FY)			
Pending Applications (outside of board control)*			
Pending Applications (within the board control)*			
Initial License/Initial Exam Cycle Time Data (WEIGHTED AVERAGE):			
Average Days to Application Approval (All - Complete/Incomplete)			
Average Days to Application Approval (incomplete applications)*			
Average Days to Application Approval (complete applications)*			
License Renewal Data:			
License Renewed			
* Optional. List if tracked by the board.			

19. How does the board verify information provided by the applicant?
    a. What process is used to check prior criminal history information, prior disciplinary actions, or other unlawful acts of the applicant?
    b. Does the board fingerprint all applicants?
    c. Have all current licensees been fingerprinted? If not, explain.

d. Is there a national databank relating to disciplinary actions? Does the board check the national databank prior to issuing a license? Renewing a license?

e. Does the board require primary source documentation?

20. Describe the board's legal requirement and process for out-of-state and out-of-country applicants to obtain licensure.

21. Does the board send No Longer Interested notifications to DOJ on a regular and ongoing basis? Is this done electronically? Is there a backlog? If so, describe the extent and efforts to address the backlog.

Examinations

Table 8. Examination Data				
California Examination (include multiple language) if any:				
	License Type			
	Exam Title			
FY 2008/09	# of 1st Time Candidates			
	Pass %			
FY 2009/10	# of 1st Time Candidates			
	Pass %			
FY 2010/11	# of 1st Time Candidates			
	Pass %			
FY 2011/12	# of 1st time Candidates			
	Pass %			
	Date of Last OA			
	Name of OA Developer			
	Target OA Date			
National Examination (include multiple language) if any:				
	License Type			
	Exam Title			
FY 2008/09	# of 1st Time Candidates			
	Pass %			
FY 2009/10	# of 1st Time Candidates			
	Pass %			
FY 2010/11	# of 1st Time Candidates			
	Pass %			
FY 2011/12	# of 1st time Candidates			
	Pass %			
	Date of Last OA			
	Name of OA Developer			
	Target OA Date			

22. Describe the examinations required for licensure. Is a national examination used? Is a California specific examination required?

23. What are pass rates for first time vs. retakes in the past 4 fiscal years? *(Refer to Table 8: Examination Data)*
24. Is the board using computer based testing? If so, for which tests? Describe how it works. Where is it available? How often are tests administered?
25. Are there existing statutes that hinder the efficient and effective processing of applications and/or examinations? If so, please describe.

School approvals

26. Describe legal requirements regarding school approval. Who approves your schools? What role does BPPE have in approving schools? How does the board work with BPPE in the school approval process?
27. How many schools are approved by the board? How often are schools reviewed?
28. What are the board's legal requirements regarding approval of international schools?

Continuing Education/Competency Requirements

29. Describe the board's continuing education/competency requirements, if any. Describe any changes made by the board since the last review.
    a. How does the board verify CE or other competency requirements?
    b. Does the board conduct CE audits on its licensees? Describe the board's policy on CE audits.
    c. What are consequences for failing a CE audit?
    d. How many CE audits were conducted in the past four fiscal years? How many fails?
    e. What is the board's course approval policy?
    f. Who approves CE providers? Who approves CE courses? If the board approves them, what is the board application review process?
    g. How many applications for CE providers and CE courses were received? How many were approved?
    h. Does the board audit CE providers? If so, describe the board's policy and process.
    i. Describe the board's effort, if any, to review its CE policy for purpose of moving toward performance based assessments of the licensees' continuing competence.

Section 5 – Enforcement Program

30. What are the board's performance targets/expectations for its enforcement program? Is the board meeting those expectations? If not, what is the board doing to improve performance?
31. Explain trends in enforcement data and the board's efforts to address any increase in volume, timeframes, ratio of closure to pending, or other challenges. What are the performance barriers? What improvement plans are in place? What has the board done and what is the board going to do to address these issues, i.e., process efficiencies, regulations, BCP, legislation?

Table 9a. Enforcement Statistics			
	FY 2009/10	FY 2010/11	FY 2011/12
COMPLAINT			
Intake (Use CAS Report EM 10)			
Received			
Closed			
Referred to INV			
Average Time to Close	-		
Pending (close of FY)			
Source of Complaint (Use CAS Report 091)			
Public			
Licensee/Professional Groups			
Governmental Agencies			
Other			
Conviction / Arrest (Use CAS Report EM 10)			
CONV Received			
CONV Closed			
Average Time to Close	-		
CONV Pending (close of FY)			
LICENSE DENIAL (Use CAS Reports EM 10 and 095)			
License Applications Denied			
SOIs Filed			
SOIs Withdrawn			
SOIs Dismissed			
SOIs Declined			
Average Days SOI	-		
ACCUSATION (Use CAS Report EM 10)			
Accusations Filed			
Accusations Withdrawn			
Accusations Dismissed			
Accusations Declined			
Average Days Accusations	-		
Pending (close of FY)			

Table 9b. Enforcement Statistics (continued)			
	FY 2009/10	FY 2010/11	FY 2011/12
DISCIPLINE			
Disciplinary Actions (Use CAS Report EM 10)			
Proposed/Default Decisions			
Stipulations			
Average Days to Complete	-		
AG Cases Initiated			
AG Cases Pending (close of FY)			
Disciplinary Outcomes (Use CAS Report 096)			
Revocation			
Voluntary Surrender			
Suspension			
Probation with Suspension			
Probation			
Probationary License Issued			
Other			
PROBATION			
New Probationers			
Probations Successfully Completed			
Probationers (close of FY)			
Petitions to Revoke Probation			
Probations Revoked			
Probations Modified			
Probations Extended			
Probationers Subject to Drug Testing			
Drug Tests Ordered			
Positive Drug Tests			
Petition for Reinstatement Granted			
DIVERSION			
New Participants			
Successful Completions			
Participants (close of FY)			
Terminations			
Terminations for Public Threat			
Drug Tests Ordered			
Positive Drug Tests			

Table 9c. Enforcement Statistics (continued)			
	FY 2009/10	FY 2010/11	FY 2011/12
INVESTIGATION			
All Investigations (Use CAS Report EM 10)			
First Assigned			
Closed			
Average days to close	-		
Pending (close of FY)			
Desk Investigations (Use CAS Report EM 10)			
Closed	-		
Average days to close	-		
Pending (close of FY)	-		
Non-Sworn Investigation (Use CAS Report EM 10)			
Closed	-		
Average days to close	-		
Pending (close of FY)	-		
Sworn Investigation			
Closed (Use CAS Report EM 10)			
Average days to close	-		
Pending (close of FY)			
COMPLIANCE ACTION (Use CAS Report 096)			
ISO & TRO Issued			
PC 23 Orders Requested			
Other Suspension Orders			
Public Letter of Reprimand			
Cease & Desist/Warning			
Referred for Diversion			
Compel Examination			
CITATION AND FINE (Use CAS Report EM 10 and 095)			
Citations Issued			
Average Days to Complete	-		
Amount of Fines Assessed			
Reduced, Withdrawn, Dismissed			
Amount Collected			
CRIMINAL ACTION			
Referred for Criminal Prosecution			

Table 10. Enforcement Aging						
	FY 2008/09	FY 2009/10	FY 2010/11	FY 2011/12	Cases Closed	Average %
Attorney General Cases (Average %)						
Closed Within:						
1 Year						
2 Years						
3 Years						
4 Years						
Over 4 Years						
Total Cases Closed						
Investigations (Average %)						
Closed Within:						
90 Days						
180 Days						
1 Year						
2 Years						
3 Years						
Over 3 Years						
Total Cases Closed						

32. What do overall statistics show as to increases or decreases in disciplinary action since last review.
33. How are cases prioritized? What is the board's compliant prioritization policy? Is it different from DCA's *Complaint Prioritization Guidelines for Health Care Agencies* (August 31, 2009)? If so, explain why.
34. Are there mandatory reporting requirements? For example, requiring local officials or organizations, or other professionals to report violations, or for civil courts to report actions taken against a licensee. Are there problems with receiving the required reports? If so, what could be done to correct the problems?
35. Does the board operate with a statute of limitations? If so, please describe and provide citation. If so, how many cases were lost due to statute of limitations? If not, what is the board's policy on statute of limitations?
36. Describe the board's efforts to address unlicensed activity and the underground economy.

Cite and Fine

37. Discuss the extent to which the board has used its cite and fine authority. Discuss any changes from last review and last time regulations were updated. Has the board increased its maximum fines to the $5,000 statutory limit?
38. How is cite and fine used? What types of violations are the basis for citation and fine?
39. How many informal office conferences, Disciplinary Review Committees reviews and/or Administrative Procedure Act appeals in the last 4 fiscal years?
40. What are the 5 most common violations for which citations are issued?
41. What is average fine pre and post appeal?
42. Describe the board's use of Franchise Tax Board intercepts to collect outstanding fines.

Cost Recovery and Restitution

43. Describe the board's efforts to obtain cost recovery. Discuss any changes from the last review.
44. How many and how much is ordered for revocations, surrenders and probationers? How much do you believe is uncollectable? Explain.
45. Are there cases for which the board does not seek cost recovery? Why?
46. Describe the board's use of Franchise Tax Board intercepts to collect cost recovery.
47. Describe the board's efforts to obtain restitution for individual consumers, any formal or informal board restitution policy, and the types of restitution that the board attempts to collect, i.e., monetary, services, etc. Describe the situation in which the board may seek restitution from the licensee to a harmed consumer.

Table 11. Cost Recovery

	FY 2009/10	FY 2010/11	FY 2011/12	FY 2012/13
Total Enforcement Expenditures				
Potential Cases for Recovery *				
Cases Recovery Ordered				
Amount of Cost Recovery Ordered				
Amount Collected				

* "Potential Cases for Recovery" are those cases in which disciplinary action has been taken based on violation of the license practice act.

Table 12. Restitution

	FY 2008/09	FY 2009/10	FY 2010/11	FY 2011/12
Amount Ordered				
Amount Collected				

Section 6 – Public Information Policies

48. How does the board use the internet to keep the public informed of board activities? Does the board post board meeting materials online? When are they posted? How long do they remain on the website? When are draft meeting minutes posted online? When does the board post final meeting minutes? How long do meeting minutes remain available online?
49. Does the board webcast its meetings? What is the board's plan to webcast future board and committee meetings?
50. Does the board establish an annual meeting calendar, and post it on the board's web site?
51. Is the board's complaint disclosure policy consistent with DCA's *Recommended Minimum Standards for Consumer Complaint Disclosure*? Does the board post accusations and disciplinary actions consistent with DCA's *Web Site Posting of Accusations and Disciplinary Actions* (May 21, 2010)?
52. What information does the board provide to the public regarding its licensees (i.e., education completed, awards, certificates, certification, specialty areas, disciplinary action, etc.)?

53. What methods are used by the board to provide consumer outreach and education?

Section 7 –
Online Practice Issues

54. Discuss the prevalence of online practice and whether there are issues with unlicensed activity. How does the board regulate online practice? Does the board have any plans to regulate Internet business practices or believe there is a need to do so?

Section 8 –
Workforce Development and Job Creation

55. What actions has the board taken in terms of workforce development?
56. Describe any assessment the board has conducted on the impact of licensing delays.
57. Describe the board's efforts to work with schools to inform potential licensees of the licensing requirements and licensing process.
58. Provide any workforce development data collected by the board, such as:
    a. Workforce shortages
    b. Successful training programs.

Section 9 –
Current Issues

59. What is the status of the board's implementation of the Uniform Standards for Substance Abusing Licensees?
60. What is the status of the board's implementation of the Consumer Protection Enforcement Initiative (CPEI) regulations?
61. Describe how the board is participating in development of BreEZe and any other secondary IT issues affecting the board.

Section 10 –
Board Action and Response to Prior Sunset Issues

Include the following:

1. Background information concerning the issue as it pertains to the board.
2. Short discussion of recommendations made by the Committee/Joint Committee during prior sunset review.

3. What action the board took in response to the recommendation or findings made under prior sunset review.
4. Any recommendations the board has for dealing with the issue, if appropriate.

Section 11 – New Issues

This is the opportunity for the board to inform the Committee of solutions to issues identified by the board and by the Committee. Provide a short discussion of each of the outstanding issues, and the board's recommendation for action that could be taken by the board, by DCA or by the Legislature to resolve these issues (i.e., legislative changes, policy direction, budget changes) for each of the following:

1. Issues that were raised under prior Sunset Review that have not been addressed.
2. New issues that are identified by the board in this report.
3. New issues not previously discussed in this report.
4. New issues raised by the Committee.

Section 12 – Attachments

Please provide the following attachments:

A. Board's administrative manual.
B. Current organizational chart showing relationship of committees to the board and membership of each committee (cf., Section 1, Question 1).
C. Major studies, if any (cf., Section 1, Question 4).
D. Year-end organization charts for last four fiscal years. Each chart should include number of staff by classifications assigned to each major program area (licensing, enforcement, administration, etc.) (cf., Section 3, Question 15).

This section only applies to specific boards, as indicated below.

Section 13 –
Board Specific Issues

Diversion

Discuss the board's diversion program, the extent to which it is used, the outcomes of those who participate, the overall costs of the program compared with its successes

Diversion Evaluation Committees (DEC) (for BRN, Dental, Osteo and VET only)

1. DCA contracts with a vendor to perform probation monitoring services for licensees with substance abuse problems, why does the board use DEC? What is the value of a DEC?
2. What is the membership/makeup composition?
3. Did the board have any difficulties with scheduling DEC meetings? If so, describe why and how the difficulties were addressed.
4. Does the DEC comply with the Open Meetings Act?
5. How many meetings held in each of the last three fiscal years?
6. Who appoints the members?
7. How many cases (average) at each meeting?
8. How many pending? Are there backlogs?
9. What is the cost per meeting? Annual cost?
10. How is DEC used? What types of cases are seen by the DECs?
11. How many DEC recommendations have been rejected by the board in the past four fiscal years (broken down by year)?

Disciplinary Review Committees (Board of Barbering and Cosmetology and BSIS only)

1. What is a DRC and how is a DRC used? What types of cases are seen by the DRCs?
2. What is the membership/makeup composition?
3. Does the DRC comply with the Open Meetings Act?
4. How many meeting held in last three fiscal years?
5. Did the board have any difficulties with scheduling DRC meetings? If so, describe why and how the difficulties were addressed.
6. Who appoints the members?
7. How many cases (average) at each meeting?
8. How many pending? Are there backlogs?
9. What is the cost per meeting? Annual cost?
10. Provide statistics on DRC actions/outcomes.

CALIFORNIA STATE BOARD OF OPTOMETRY

2450 Del Paso Road, Suite 105
Sacramento, CA 95834
(916) 575-7170, (916) 575-7292 Fax
www.optometry.ca.gov

Memo

To: Board Members **Date:** March 18, 2012

From: Andrea Leiva, Policy Analyst **Telephone:** (916) 575-7182

Subject: **Agenda Item 7 – Regulations**

A. Discussion and Possible Action Pertaining to the Comments Received During the 45-Day Comment Period of California Code of Regulations (CCR) §1575. Disciplinary Guidelines

Background:
This rulemaking package updates the Board's disciplinary guidelines to reflect the current enforcement and probationary environment, and adds the mandatory Uniform Standards Related to Substance Abuse pursuant to Senate Bill 1441 (Ridley-Thomas, Chapter 548, Statutes of 2008). These two documents are incorporated by reference in CCR §1575. The Board approved proposed regulatory language at its September 16, 2011 meeting. The proposed regulatory language was noticed on the Board's website and mailed to interested parties on October 21, 2011, initiating the 45-day public comment period. The comment period began on October 21, 2011 and ended on December 6, 2011. The Board received two comments at the regulatory hearing held on December 6, 2011 for this rulemaking package.

There are three portions to Section A of this agenda item:
1. Review of Legal Opinions;
2. Review of comments received during the 45-day comment period pertaining to text of CCR §1575, and vote to accept proposed modified text as a result of the comments received; and
3. Review of additional proposed modified text within the Disciplinary Guidelines and vote to accept or reject proposed modified text.

1. Review of Legal Opinions
Before the Board could respond to the comments received during the 45-day comment period, on February 22, 2012, staff learned the Department of Consumer Affairs (Department) received a legal opinion from the Attorney General pertaining to the Uniform Standards Related to Substance Abuse. The Attorney General's legal opinion differed from the Legislative Counsel's legal opinion, thus the Department requested that all Boards implementing SB 1441 hold off on taking anymore action until the opinions could be reviewed. At it's March 2, 2012 meeting, the Board voted to take the Department's recommendation and moved to deal with this issue at a future meeting (See Attachments 1, 2, 3 to review opinions).

On April 5, 2012, the Department's review of the two legal options was completed and a memo was issued to advise the healing arts boards. The Department's findings are as follows:

1. The Department, the Attorney General and Legislative Counsel all agree that healing arts boards do not have the discretion to modify the content of specific terms or conditions of probation that make up the Uniform Standards.

2. The Department, the Attorney General and Legislative Counsel all agree that, unless the Uniform Standards specifically provide, all Uniform Standards must be applied to cases involving substance-abusing licensees, as it is their belief that the Legislative intent was to "provide the full implementation of the Uniform Standards."
3. The Department agreed with the Attorney General that the Substance Abuse Coordination Committee (SACC) is not the entity with rulemaking authority over the Uniform Standards. The entities with the rulemaking authority to implement the Uniform Standards are the individual boards. The SACC was limited to the creation of the Uniform Standards, but is not authorized to implement them.

Based on the findings above, the Department recommendation is that the healing arts boards move forward as soon as possible to implement the mandate of Business and Professions Code §315 (Uniform Standards), and to work with our legal counsel to 1) include a definition of what constitutes a "substance-abusing licensee,"; and to 2) determine if the Uniform Standards should be placed in a regulation separate from the Disciplinary Guidelines.

Action Requested: Staff recommends the Board to take the Department recommendation and move forward with the Uniform Standards Related to Substance Abuse and Disciplinary Guidelines as planned. There is already a definition of what constitutes a "substance-abusing licensee" in the Board's regulation, and it was decided at the September 16, 2011 Board meeting that the Uniform Standards should be incorporated by reference in the regulation together with the Disciplinary Guidelines.

2. Review of comments received during the 45-day comment period pertaining to text of CCR §1575, and vote to accept proposed modified text as a result of the comments received

The Department (See Attachment 4) and the Center for Public Interest Law (CPIL) (See Attachment 5) commented that the regulations as proposed allow the Board to diverge from the Uniform Standards if the licensee establishes that, in his or her particular case, appropriate public protection can be provided with modification or omission of a specific standard as a term of probation.

Pursuant to Senate Bill 1441, the uniform standards **shall** be used by all healing arts boards dealing with substance-abusing licensees, whether or not the board chooses to have a formal diversion program. Thus, the unambiguous language and intent of the statute are clear: the uniform standards are mandatory. Once a licensee is determined to be a substance-abusing licensee, the uniform standards must be applied. The first paragraph in CCR §1575 states that the Board must "comply" with the standards, which is correct. However, subsection (b) of CCR §1575 conflicts with that paragraph and renders the uniform standards discretionary, when they clearly are not.

The Department and CPIL both recommend that the Board strike all the language in subsection (b) after the word "apply" in the fourth line of the subsection.

<u>Staff Recommended Response:</u> The Board accepts this comment. The Board agrees with the Department and CPIL that the uniform standards are mandatory and will amend the language as suggested to comply with Senate Bill 1441 (See Attachment 6 for proposed modified text).

Action Requested: Depending on the Board's response to the comments received, staff requests that the Board take one of the following actions:

1) Accept the comments received as recommended by staff, vote to accept the proposed modified text, and direct staff to initiate a 15-day public comment period. If after the 15-day public comment period, no adverse comments are received, authorize the Executive Officer to make any non-substantive changes to the proposed regulations before completing the rulemaking process, and adopt the proposed amendments to CCR §1575; or

2) Reject the comments received and staff's recommendations after consideration, and discuss another solution. After discussion and if modifications are made, vote to accept the text as modified and permit

staff to initiate a 15-day public comment period. If after the 15-day public comment period, no adverse comments are received, authorize the Executive Officer to make any non-substantive changes to the proposed regulations before completing the rulemaking process, and adopt the proposed amendments to CCR §1575.

3. Review of additional proposed modified text within the Disciplinary Guidelines and vote to accept or reject proposed modified text

Upon further review of the proposed changes being made to the Board's Disciplinary Guidelines and other boards' Disciplinary Guidelines (See Attachment 7 for document), staff is recommending the following modifications. Minor changes have also been made throughout the document such as format change, grammar and, style, but are not relevant enough to be considered as they are non-substantive in nature.

A) Page 17 – Quarterly Reports: Incorporates by reference the Quarterly Report of Compliance form (DG-QR1(05/2012)) The form will be provided on the day of the meeting.
Reason: The condition states that the Board will provide quarterly report forms for the Respondent to complete. Since a particular form is intended, the form must be reviewed for compliance with the Administrative Procedures Act. If the form is found to contain regulatory content that is not provided for in statute or other applicable law, the requirement for incorporation by reference applies (CCR section 20). Thus, this form must be included in the rulemaking file for the Office of Administrative Law's review and will need to be noticed for a 15-day public comment period along with the modified text.

B) Page 18 – Probation Monitoring Costs: Deletes the language requiring the Respondent to reimburse the Board for costs incurred even though the Respondent filed for bankruptcy.
Reason: This language is not consistent with the Federal Bankruptcy Code, which allows for the discharge of certain debts, including cost recovery. Thus, since Federal Law overrides State Law, the Board cannot circumvent the Bankruptcy Code provisions, and this language must be removed.

C) Page 19 – Cost Recovery: Same reason as bullet A above.

D) Page 19-20 – Take and Pass California Laws and Regulations Examination: Re-adds the language permitting two options (condition subsequent and condition precedent) when it comes to passing the exam.
Reason: The language approved at the September 16, 2011 Board meeting is too restrictive in the opinion of staff. As currently written, the Board is suspending all Respondents from practicing until they pass the exam, without consideration of the type of violation. This conflicts with Standard Term and Condition 5, Function as an Optometrist where the Respondent must function as an optometrist for a minimum of 60 hours per month for the entire term of his/her probation period. The Board's intent is not to cripple a licensee while they are on probation, but to keep them working so they can maintain their business, support themselves and their families, pay for the costs incurred by their probation, and most importantly, to maintain their skills as an optometrist. This ensures that the Respondent remains current on optometric methods and education, and is ready to practice as soon as their term ends (the ultimate goal, if revocation is not warranted instead).

The Condition Precedent option will continue to be available in cases where the Respondent has been found to be grossly negligent or inefficient, but it should not be the only option. How the options are used is at the discretion of the Board, so if the Board wishes to always choose the Condition Precedent option, this will still be possible. It would not be favorable to lose the Condition Subsequent option because it may be needed when a situation requires the Board to be more flexible.

E) Page 20 – Community Services: Re-formats the text of this requirement to clarify that the Board has discretion to determine what community services are appropriate, depending on the violation.
Reason: This language was already present in the condition, it has just been moved to the beginning of the requirement so that it is more prominent, and to reduce confusion.

F) Page 22 – Abstention from Use of Controlled Substances/Alcohol: Strengthens and clarifies the requirement pertaining to the Respondent's intake of lawfully prescribed drugs to prevent the Respondent from relapsing. Also adds a timeline for submission of quarterly reports and the required information that must be included in each report.
Reason: As currently written, the condition is open-ended and could be interpreted in a way that will allow the Respondent to continue the abuse of drugs. The Respondent could potentially have multiple prescribing licensed practitioners who are not aware of the Respondent's condition and prescribe more drugs than the Respondent needs, or have one licensed practitioner that is sympathetic to the Respondent who documents a medical treatment which may be incorrect to permit the Respondent to continue abusing drugs.

The proposed language being added reduces the opportunity for the Respondent to find "loopholes" that allow him/her to continue abusing drugs. One health practitioner would be in control instead of many, and aware of the Respondent's condition in order to appropriately coordinate any prescriptions the Respondent may need. That one health practitioner will report quarterly to the Board, and provide a program to ensure time-limited use of any substances. This new language also gives the Board authority to require the chosen health practitioner to be a specialist in addictive medicine, or to consult with a specialist in addictive medicine so that the Respondent will receive the appropriate treatment.

Furthermore, adding a timeline to submit reports that mimics the timeline established by Standard Probationary Term and Condition 2 makes the Respondent responsible for submission of the reports by the physician, nurse practitioner or physician assistant, or else it will constitute a violation of probation. A timeline and a listing of what should be included in each quarterly report also gives the Respondent and physician, nurse practitioner or physician assistant guidance so that the reports are an effective form of communication, and are submitted at the same time, not at random. Quarterly reports assist the Board in making decisions pertaining to a Respondent's probation.

G) Page 23 – Biological Fluid Testing – Deletes reference to a page number.
Reason: The reference is now incorrect because of all the amendments being made to the document.

H) Page 26-28 – Worksite Monitor: Clarifies and re-formats the condition. Changes the language to permit only an optometrist or an ophthalmologist to be worksite monitors and not other healthcare practitioners. Adds language to permit the worksite monitor to disagree with the Board's monitoring plan and provide their own recommendation for approval. Adds language requiring that the worksite monitor begin monitoring the Respondent within 60 calendar days and requires Respondent to make all records available for the worksite monitor's review. Adds language permitting the Board to require the Respondent to cease practice if a worksite monitor is not obtained and approved within 60 calendar days of the effective date of the Decision. Deletes language pertaining to substance abusing licensees because the uniform standards already deal with such licensees. Adds language establishing guidelines in the event the worksite monitor resigns, or is no longer available, or if the Respondent fails to find a worksite monitor in the time allotted. Adds language describing the required information that must be included in each quarterly report.
Reason: The proposed amendments strengthen this condition by ensuring that a worksite monitor is present at all times. Also, the new language provides guidelines for situations that may arise, and provides a listing of what should be included in each quarterly report so that they are an effective form of communication. Quarterly reports assist the Board in making decisions pertaining to a Respondent's probation. The proposed changes make the condition less vague and ensure patients are protected from a Respondent who has been deemed by the Board to be unable to practice without a worksite monitor.

I) Page 28-29 – Direct Supervision: Adds language describing the require information that must be included in each quarterly report.
Reason: A listing of what should be included in the quarterly report will ensure that the report is an effective form of communication that assists the Board to make decisions pertaining to the Respondent's probation. It will also provides guidance to the direct supervisor on what the Board

expects from a quarterly report.

J) Page 30-31 – Psychotherapy of Counseling Program: Reduces the amount of time a Respondent has to submit to the Board for its approval the name of a psychotherapist from 60 calendar days to 30 calendar days. Also adds a timeline for submission of quarterly reports and the required information that must be included in each report.
Reason: The time is being reduced for three reasons: 1) During the 60 days, the Respondent is still practicing and that presents a possible danger to consumers if in the opinion of the Board, the Respondent needs a counseling program in order to continue practicing safely; 2) It is the opinion of staff that 60 days is too excessive and delays the Respondent's compliance with probationary terms. Thirty days is a reasonable amount of time and will keep the Respondent on track so that probationary terms do not fall through the cracks; and 3) For consistency purposes, and in order to reduce confusion amongst Respondents.

Furthermore, adding a timeline to submit reports that mimics the timeline established by Standard Probationary Term and Condition 2 makes the Respondent responsible for submission of the reports by the psychotherapist, or else it will constitute a violation of probation. A timeline and a listing of what should be included in each quarterly report also gives the Respondent and psychotherapist guidance so that the reports are an effective form of communication, and are submitted at the same time, not at random. Quarterly reports assist the Board in making decisions pertaining to a Respondent's probation.

K) Page 31-32 – Mental Health Evaluation: Adds language to give the Board authority to suspend a Respondent from practice if the mental health evaluation establishes that the Respondent is unsafe to practice. Adds language that establishes guidelines if the mental health evaluation determines that the Respondent needs treatment, and what would occur if the Respondent continues having mental health issues even after treatment. Re-adds the optional language previously deleted that permits the Board to restrict the Respondent from practice until the Board has determined that he/she is mentally fit to practice safely. Also adds a timeline for submission of quarterly reports and the required information that must be included in each report.
Reason: The proposed language strengthens this condition in the manner described above for those cases where a Respondent is a danger to consumers due to mental health issues. The condition as currently written does not describe what steps to take if the Respondent's mental health evaluation is not favorable and requires the Respondent to either cease practice to protect patients, or enter into further treatment. This condition is different than condition 27, Psychotherapy or Counseling Program, which is for cases where a Respondent has had mental impairment related to the violations, but is not at present a danger to patients.

Furthermore, adding a timeline to submit reports that mimics the timeline established by Standard Probationary Term and Condition 2 makes the Respondent responsible for submission of the reports by the mental health practitioner, or else it will constitute a violation of probation. A timeline and a listing of what should be included in each quarterly report also gives the Respondent and mental health practitioner guidance so that reports are an effective form of communication and are submitted at the same time, not at random. Quarterly reports assist the Board in making decisions pertaining to a Respondent's probation.

L) Page 33 - Medical Health Evaluation: Adds language giving the Board authority to require the Respondent to undergo medical treatment based on the medical evaluation results. Also adds a timeline for submission of quarterly reports and the required information that must be included in each report.
Reason: Clarifies that the Board has authority to require the Respondent to undergo medical treatment.

Furthermore, adding a timeline to submit reports that mimics the timeline established by Standard Probationary Term and Condition 2 makes the Respondent responsible for submission of the reports by the physician, or else it will constitute a violation of probation. A timeline and a listing of what should be included in each quarterly report also gives the Respondent and physician guidance so that reports are an effective form of communication and are submitted at the same time, not at random. Quarterly

reports assist the Board in making decisions pertaining to a Respondent's probation.

M) Page 34 - Medical Treatment: Reduces the amount of time a Respondent has to submit to the Board for its approval the name of a physician from 60 days to 30 days. Also adds a timeline for submission of quarterly reports and the required information that must be included in each report.
Reason: The time is being reduced for three reasons: 1) During the 60 days, the Respondent is still practicing and that presents a danger to consumers if in the opinion of the Board, the Respondent's medical condition or disability presents a danger to consumers; 2) It is the opinion of staff that 60 days is too excessive and delays the Respondent's compliance with probationary terms. Thirty days is a reasonable amount of time and will keep the Respondent on track so that probationary terms do not fall through the cracks; and 3) For consistency purposes, and in order to reduce confusion amongst Respondents.

Furthermore, adding a timeline to submit reports that mimics the timeline established by Standard Probationary Term and Condition 2 makes the Respondent responsible for submission of the reports by the physician, or else it will constitute a violation of probation. A timeline and a listing of what should be included in each quarterly report also gives the Respondent and physician guidance so that reports are an effective form of communication and are submitted at the same time, not at random. Quarterly reports assist the Board in making decisions pertaining to a Respondent's probation.

N) Page 35-36 - Audit Required: Reduces the amount of time a Respondent has to submit to the Board for its approval the name of three third party auditors from 60 days to 30 days. Requires the auditor to submit quarterly reports following format and schedule provided by the Board. Requires the auditor to review the Respondent's accusation and decision and create a monitoring plan if the auditor disagrees with the Board's plan. Requires the auditor to begin auditing the Respondent within 60 calendar days of the effective date of the decision, and requires the Respondent to provide all documentation. Establishes guidelines in the event the Respondent fails to find an auditor, or the auditor resigns or is no longer available. Gives the Board the authority to suspend practice if the Respondent does not comply with the condition. Also changes the formatting of the condition to match the other condition in the document.
Reason: During the 60 days, the Respondent is still practicing and could still be performing questionable bill practices that may harm consumers.; 2) It is the opinion of staff that 60 days is too excessive and delays the Respondent's compliance with probationary terms. Thirty days is a reasonable amount of time and will keep the Respondent on track so that probationary terms do not fall through the cracks; and 3) For consistency purposes, and in order to reduce confusion amongst Respondents.

Furthermore, the proposed amendments strengthen this condition by ensuring that an auditor is present at all times and providing guidelines for situations that may arise. The proposed changes make the condition less vague and ensure patients are protected from a Respondent who has had billing issues.

Also, adding a timeline to submit reports that mimics the timeline established by Standard Probationary Term and Condition 2 makes the Respondent responsible for submission of the reports by the auditor, or else it will constitute a violation of probation. A timeline and a listing of what should be included in each quarterly report also gives the Respondent and auditor guidance so that reports are an effective form of communication and are submitted at the same time, not at random. Quarterly reports assist the Board in making decisions pertaining to a Respondent's probation.

O) Page 37 – Continuing Education: Reduces the amount of time a Respondent has to submit to the Board for its approval educational programs or courses from 60 days to 30 days.
Reason: Thirty days is a reasonable amount of time for a Respondent to find a continuing education course. It will keep the Respondent on track so that this probationary term does not fall through the cracks, and is consistent with the other time periods in the Optional Conditions portion of this document. A variety of time periods may be confusing to the Respondent.

P) Page 37-38 – Medical Record Keeping Course: Adds this course for cases where the Respondent is deficient in medical record keeping, and that deficiency is a cause for the violation(s).
Reason: This course is necessary to ensure that after probation, the Respondent is ready to return to practice and apply what was learned in this remedial course to prevent future violations from occurring.

Action Requested: Depending on the Board's discussion and decision whether to adopt proposed changes A) – O), staff requests that the Board take one of the following actions.

1) Accept the recommended modifications to the proposed language, vote to accept the proposed modified text and the form incorporated by reference, and direct staff to initiate a 15-day public comment period. If after the 15-day public comment period, no adverse comments are received, authorize the Executive Officer to make any non-substantive changes to the proposed regulations and document incorporated by reference before completing the rulemaking process, and adopt the proposed amendments to the Disciplinary Guidelines document.

2) Reject some or all the recommended modifications after consideration, and discuss another solution, if any. After discussion, vote to accept the text as modified and the document incorporated by reference, and permit staff to initiate a 15-day public comment period. If after the 15-day public comment period, no adverse comments are received, authorize the Executive Officer to make any non-substantive changes to the proposed regulations and the document incorporated by reference before completing the rulemaking process, and adopt the proposed amendments to the Disciplinary Guidelines document.

B. Consideration and Possible Action to Delegate to the Department of Consumer Affairs Authority to Receive Sponsoring Entity Registration Forms and to Registering Sponsoring Entities for Sponsored Free Health-Care Event that Utilize the Services of Optometrists

Background:
At its March 2, 2012 meeting, the Board voted to begin a rulemaking to implement Business and Professions Code §901 which requires out-of-state optometrists to obtain authorization from the Board prior to participating in a sponsored free health-care event in California.

Prior to noticing the this regulatory action with the Office of Administrative Law (OAL), the Department contacted all healing arts boards that have proposed regulations relevant to sponsored free health care events, advising that the boards may need to further clarify the Department's role in receiving and registering sponsoring entities. The Medical Board of California (MBC), Board of Occupational Therapy (BOT), and the Board of Vocational Nursing and Psychiatric Technicians (BVNPT) had all submitted their final rulemaking files to OAL. On March 13, 2012, OAL issued a Decision of Disapproval of MBC's proposed regulations due to failure to comply with clarity and necessity standards, as well as procedural issues.

OAL's primary clarity concern related to the specific content of MBC's Form 901-A in relation to the content of similar forms proposed by other healing arts boards within the Department. BVNPT and BOT used similar forms incorporated by reference, and each form contained language similar to MBC's form indicating that only one registration form per event should be completed and submitted to DCA. OAL was concerned that there was not one common form with a uniform set of regulatory requirements which would, with certainty, allow for the filing of a "single, common form" that meets the regulatory requirements of the three agencies. OAL could not easily understand how the "only one form per event" provision on each of the individual board's form would work in practice. The differing forms from each board could create the potential for confusion and uncertainty among sponsoring entities legally required to comply with the regulations.

Action Requested:
Staff recommends the Board to adopt the enclosed Resolution (See Attachment 8) to formally delegate authority to the Department the authority to receive sponsored entity registration forms and to register

sponsoring entities for sponsored free health care events that utilize the service of optometrists and to direct staff to add the adopted Resolution to the Board's Sponsored Free Health Care Events rulemaking file.

By delegating authority to the Department, sponsoring entities will clearly understand that they should submit a single, common form that meets the regulatory requirements of multiple healing arts boards, rather than filing registration forms with each individual healing arts board.

STATE OF CALIFORNIA
DEPARTMENT OF CONSUMER AFFAIRS

STATE AND CONSUMER SERVICES AGENCY • GOVERNOR EDMUND G. BROWN JR.
DIVISION OF LEGAL AFFAIRS
1625 N. Market Blvd., Suite S 309, Sacramento, CA 95834
P (916) 574-8220 F (916) 574-8623

MEMORANDUM

DATE	**April 5, 2012**
TO	**ALL HEALING ARTS BOARDS**
FROM	**DOREATHEA JOHNSON** **Deputy Director, Legal Affairs** **Department of Consumer Affairs**
SUBJECT	**Opinion Regarding Uniform Standards for Substance-Abusing Licensees (SB 1441)**

This memo addresses a number of questions that have been raised concerning the discretion of healing arts boards, with respect to the Uniform Standards for Substance-Abusing Healing Arts Licensees ("Uniform Standards") that were formulated by the Substance Abuse Coordination Committee and mandated by Business and Professions Code section 315. Previously, there have been discussions and advice rendered, opining that the boards retain the discretion to modify the Uniform Standards. This opinion, largely influenced by the fact that the rulemaking process necessarily involves the exercise of a board's discretion, has been followed by a number of boards as they completed the regulatory process.

Two opinions, one issued by the Legislative Counsel Bureau ("Legislative Counsel") dated October 27, 2011, and an informal legal opinion, rendered by the Government Law Section of the Office of the Attorney General ("Attorney General"), dated February 29, 2012, have been issued and address the discretion of the boards, in adopting the Uniform Standards. This memo is to advise the healing arts boards of this office's opinion regarding the questions raised, after a review of these two opinions. A copy of each opinion is attached for your convenience.

Questions Presented

1. **Do the healing arts boards retain the discretion to modify the content of the specific terms or conditions of probation that make up the Uniform Standards?**

   Both Legislative Counsel and the Attorney General concluded that the healing arts boards do not have the discretion to modify the content of the specific terms or conditions of probation that make up the Uniform Standards. We concur with that conclusion.

2. **Do the healing arts boards have the discretion to determine which of the Uniform Standards apply in a particular case?**

   Legislative Counsel opined that, unless the Uniform Standards specifically so provide, all of the Uniform Standards must be applied to cases involving substance-abusing licensees, as it was their belief that the Legislative intent was to "provide for the full implementation of the Uniform Standards." The Attorney General agreed with Legislative Counsel. Following our review and analysis of Business and Professions Code Section 315, we concur with both the Office of the Attorney General and the Legislative Counsel.

3. **Is the Substance Abuse Coordination Committee (SACC) the entity with rulemaking authority over the uniform standards to be used by the healing arts boards?**

   The Legislative Counsel concluded that the SACC had the authority to promulgate regulations mandating that the boards implement the Uniform Standards. However, the Office of the Attorney General disagreed and concluded that the SACC was not vested with the authority to adopt regulations implementing the uniform standards. We agree with the Office of the Attorney General. It is our opinion that the authority to promulgate the regulations necessary to implement the Uniform Standards, lies with the individual boards that implement, interpret or make specific, the laws administered by those boards. As the SACC is limited to the creation or formulation of the uniform standards, but is not authorized to implement the laws of the healing arts boards, it does not have authority to adopt regulations to implement those standards. Consequently, we agree with the Attorney General's opinion that the SACC is not the rule-making entity with respect to the Uniform Standards, and therefore has no authority to adopt the Uniform Standards as regulations.

It is our recommendation that healing arts boards move forward as soon as possible to implement the mandate of Business and Professions Code section 315, as it relates to

the Uniform Standards. Some of the standards are appropriate for inclusion in an agency's disciplinary guidelines, which necessarily will involve the regulatory process. Others are administrative in nature and not appropriate for inclusion in the disciplinary guidelines. For example, Uniform Standard No. 16 which sets forth reporting requirements would not be appropriate for inclusion in disciplinary guidelines.

Please work with your assigned legal counsel to determine how best to implement the Uniform Standards. This should include a discussion as to whether : (1) the Uniform Standards should be placed in a regulation separate from the disciplinary guidelines; (2) the implementing regulation should include a definition of (or criteria by which to determine) what constitutes a "substance-abusing licensee."

It is hopeful that the foregoing information addresses your concerns with respect to the implementation of the mandatory uniform standards.

Attachments

cc: Denise Brown, DCA Director
Awet Kidane, DCA Chief Deputy Director
DCA Legal Affairs Attorneys

LEGISLATIVE COUNSEL BUREAU

A TRADITION OF TRUSTED LEGAL SERVICE TO THE CALIFORNIA LEGISLATURE

LEGISLATIVE COUNSEL BUREAU

October 27, 2011

Honorable Curren D. Price Jr.
Room 2053, State Capitol

HEALING ARTS BOARDS: ADOPTION OF UNIFORM STANDARDS - #1124437

Dear Senator Price:

You have asked two questions with regard to the adoption of uniform standards by the Substance Abuse Coordination Committee pursuant to Section 315 of the Business and Professions Code. You have asked whether the Substance Abuse Coordination Committee is required to adopt the uniform standards pursuant to the rulemaking procedures under the Administrative Procedure Act (Ch. 3.5 (commencing with Sec. 11340), Pt. 1, Div. 3, Title 2, Gov. C.). You have also asked, if the uniform standards are properly adopted by the Substance Abuse Coordination Committee, whether the healing arts boards are required to implement them.

By way of background, Section 315 of the Business and Professions Code[1] provides as follows:

> "315. (a) For the purpose of determining uniform standards that will be used by healing arts boards in dealing with substance-abusing licensees, there is established in the Department of Consumer Affairs the Substance Abuse Coordination Committee. The committee shall be comprised of the executive officers of the department's healing arts boards established pursuant to Division 2 (commencing with Section 500), the State Board of Chiropractic Examiners, the Osteopathic Medical Board of California, and a designee of the State Department of Alcohol and Drug Programs. The Director of Consumer Affairs shall chair the committee and may invite individuals or stakeholders who have particular expertise in the area of substance abuse to advise the committee.

[1] All further section references are to the Business and Professions Code, unless otherwise referenced.

"(b) The committee shall be subject to the Bagley-Keene Open Meeting Act (Article 9 (commencing with Section 11120) of Division 3 of Title 2 of the Government Code).

"(c) By January 1, 2010, the committee shall formulate uniform and specific standards in each of the following areas that each healing arts board shall use in dealing with substance-abusing licensees, whether or not a board chooses to have a formal diversion program:

"(1) Specific requirements for a clinical diagnostic evaluation of the licensee, including, but not limited to, required qualifications for the providers evaluating the licensee.

"(2) Specific requirements for the temporary removal of the licensee from practice, in order to enable the licensee to undergo the clinical diagnostic evaluation described in paragraph (1) and any treatment recommended by the evaluator described in paragraph (1) and approved by the board, and specific criteria that the licensee must meet before being permitted to return to practice on a full-time or part-time basis.

"(3) Specific requirements that govern the ability of the licensing board to communicate with the licensee's employer about the licensee's status and condition.

"(4) Standards governing all aspects of required testing, including, but not limited to, frequency of testing, randomness, method of notice to the licensee, number of hours between the provision of notice and the test standards for specimen collectors, procedures used by specimen collectors, the permissible locations of testing, whether the collection process must be observed by the collector, backup testing requirements when the licensee is on vacation or otherwise unavailable for local testing, requirements for the laboratory that analyzes the specimens, and the required maximum timeframe from the test to the receipt of the result of the test.

"(5) Standards governing all aspects of group meeting attendance requirements, including, but not limited to, required qualifications for group meeting facilitators, frequency of required meeting attendance, and methods of documenting and reporting attendance or nonattendance by licensees.

"(6) Standards used in determining whether inpatient, outpatient, or other type of treatment is necessary.

"(7) Worksite monitoring requirements and standards, including, but not limited to, required qualifications of worksite monitors, required methods of monitoring by worksite monitors, and required reporting by worksite monitors.

"(8) Procedures to be followed when a licensee tests positive for a banned substance.

"(9) Procedures to be followed when a licensee is confirmed to have ingested a banned substance.

"(10) Specific consequences for major violations and minor violations. In particular, the committee shall consider the use of a deferred prosecution stipulation similar to the stipulation described in Section 1000 of the Penal Code, in which the licensee admits to self-abuse of drugs or alcohol and surrenders his or her license. That agreement is deferred by the agency unless or until the licensee commits a major violation, in which case it is revived and the license is surrendered.

"(11) Criteria that a licensee must meet in order to petition for return to practice on a full-time basis.

"(12) Criteria that a licensee must meet in order to petition for reinstatement of a full and unrestricted license.

"(13) If a board uses a private-sector vendor that provides diversion services, standards for immediate reporting by the vendor to the board of any and all noncompliance with any term of the diversion contract or probation; standards for the vendor's approval process for providers or contractors that provide diversion services, including, but not limited to, specimen collectors, group meeting facilitators, and worksite monitors; standards requiring the vendor to disapprove and discontinue the use of providers or contractors that fail to provide effective or timely diversion services; and standards for a licensee's termination from the program and referral to enforcement.

"(14) If a board uses a private-sector vendor that provides diversion services, the extent to which licensee participation in that program shall be kept confidential from the public.

"(15) If a board uses a private-sector vendor that provides diversion services, a schedule for external independent audits of the vendor' performance in adhering to the standards adopted by the committee.

"(16) Measurable criteria and standards to determine whether each board' method of dealing with substance-abusing licensees protects patients from harm and is effective in assisting its licensees in recovering from substance abuse in the long term." (Emphasis added.)

Thus, the Legislature has established in the Department of Consumer Affairs (hereafter department) the Substance Abuse Coordination Committee (subd. (a), Sec. 315; hereafter committee). The committee is comprised of the executive officers of each healing arts board within the department,[2] the State Board of Chiropractic Examiners, and the

[2] The department's healing arts boards are those boards established under Division 2 (commencing with Section 500) to license and regulate practitioners of the healing arts. Those boards include, among others, the Dental Board of California, the Medical Board of California, the Veterinary Medical Board, and the Board of Registered Nursing.

Osteopathic Medical Board of California (hereafter, collectively, healing arts boards), and a designee of the State Department of Alcohol and Drug Programs (Ibid.). The Director of Consumer Affairs chairs the committee and is authorized to invite individuals or stakeholders who have particular expertise in the area of substance abuse to advise the committee (Ibid.).

The committee is required to formulate uniform and specific standards in each of 16 areas provided by the Legislature, but otherwise has discretion to adopt the uniform standards each healing arts board shall use in dealing with substance-abusing licensees (subd. (c), Sec. 315). The committee adopted its initial set of uniform standards in April 2010, and revised those initial standards as recently as April 2011.[3] Although the committee has adopted the uniform standards pursuant to its own procedures, it has yet to adopt those standards pursuant to the rulemaking procedures of the Administrative Procedure Act (Ch. 3.5 (commencing with Sec. 11340), Pt. 1, Div. 3, Title 2, Gov. C.; hereafter APA).

You have asked whether the committee is required to adopt the uniform standards pursuant to the rulemaking procedures of the APA.

The APA establishes basic minimum procedural requirements for the adoption, amendment, or repeal of administrative regulations by state agencies (subd. (a), Sec. 11346, Gov. C.). The APA is applicable to the exercise of any quasi-legislative power conferred by any statute (Ibid.). Quasi-legislative powers consist of the authority to make rules and regulations having the force and effect of law (*California Advocates for Nursing Home Reform v. Bonta* (2003) 106 Cal.App.4th 498, 517; hereafter *California Advocates*). The APA may not be superseded or modified by any subsequent legislation except to the extent that the legislation does so expressly (subd. (a), Sec. 11346, Gov. C.).

The term "regulation" is defined for purposes of the APA to mean "<u>every</u> rule, regulation, order, or <u>standard of general application</u> or the amendment, supplement, or revision of any rule, regulation, order, or standard adopted by any state agency <u>to implement, interpret, or make specific the law enforced or administered by it, or to govern its procedure</u>" (Sec. 11342.600, Gov. C.; emphasis added). The APA provides that a state agency shall not issue, utilize, enforce, or attempt to enforce any guideline, criterion, bulletin, manual, instruction, order, standard of general application, or other rule, which is a regulation under the APA, unless properly adopted under the procedures set forth in the APA, and the Office of Administrative Law is empowered to determine whether any such guideline, criterion, bulletin, manual, instruction, order, standard of general application, or other rule is a regulation under the APA (Sec. 11340.5, Gov. C.).

In *Tidewater Marine Western, Inc. v. Bradshaw* (1996) 14 Cal.4th 557, 571 (hereafter *Tidewater*), the California Supreme Court found as follows:

---

[3] See http://www.dca.ca.gov/about_dca/sacc/index.shtml (as of September 20, 2011).

OCT-27-2011 14:18 From:BP AND CMTE 9163240917 To:574 8666 P.5/11

"A regulation subject to the APA thus has two principal identifying characteristics. (See *Union of American Physicians & Dentists v. Kizer* (1990) 223 Cal.App.3d 490, 497 [272 Cal.Rptr. 886] [describing two-part test of the Office of Administrative Law].) First, the agency must intend its rule to apply generally, rather than in a specific case. The rule need not, however, apply universally; a rule applies generally so long as it declares how a certain class of cases will be decided. (*Roth v. Department of Veterans Affairs* (1980) 110 Cal.App.3d 622, 630 [167 Cal.Rptr. 552].) Second, the rule must 'implement, interpret, or make specific the law enforced or administered by [the agency], or ... govern [the agency's] procedure.' (Gov. Code, § 11342, subd. (g).)"

If a policy or procedure falls within the definition of a "regulation" within the meaning of the APA, the adopting agency must comply with the procedures for formalizing the regulation, which include public notice and approval by the Office of Administrative Law (*County of Butte v. Emergency Medical Services Authority* (2010) 187 Cal.App.4th 1175, 1200). The Office of Administrative Law is required to review all regulations adopted pursuant to the APA and to make its determinations according to specified standards that include, among other things, assessing the necessity for the regulation and the regulation's consistency with the agency's statutory obligation to implement a statute (subd. (a), Sec. 11349.1, Gov. C.).

Applying these principles to the question presented, the uniform standards are subject to the rulemaking procedures of the APA if the following criteria are met: (1) Section 315 does not expressly preclude application of the APA, (2) the committee is a state agency under the APA, (3) the uniform standards are regulations subject to the APA, and (4) no exemption applies under the APA.

With respect to the first criterion, Section 315 is silent on the application of the APA. Thus, Section 315 does not expressly preclude application of the APA, and the APA will apply to any regulation adopted under Section 315.

We turn next to the second criterion, and whether the committee is an "agency" for purposes of the APA. The word "agency" is defined, for purposes of the APA, by several separate provisions of law. For purposes of the rulemaking procedures of the APA, "agency" is defined to mean a state agency (Sec. 11342.520, Gov. C.). That reference to state agency is defined elsewhere in the Government Code to include every state office, officer, department, division, bureau, board, and commission (subd. (a), Sec. 11000, Gov. C.). The APA does not apply to an agency in the judicial or legislative branch of the state government (subd. (a), Sec. 11340.9, Gov. C.).

Along those lines, the APA is applicable to the exercise of any quasi-legislative power conferred by any statute (subd. (a), Sec. 11346, Gov. C.). Quasi-legislative powers consist of the authority to make rules and regulations having the force and effect of law (*California Advocates*, supra, at p. 517). Thus, for purposes of our analysis, we think that an "agency" means any state office, officer, department, division, bureau, board, or commission that exercises quasi-legislative powers.

OCT-27-2011 14:19 From:BP AND CMTE 9163240917 To:574 8666 P.6/11

Here, the committee is a state office comprised of executive officers of the healing arts boards and the Director of Consumer Affairs. Although the Legislature has set forth 16 areas in which the committee is required to adopt standards, the committee itself is required to exercise quasi-legislative powers and adopt uniform standards within those areas. Those standards shall have the force and effect of law, since the healing arts boards, as discussed more extensively below, are required to use the standards in dealing with substance-abusing licensees and the standards are required to govern matters such as when a licensee is temporarily removed from practice or subject to drug testing or work monitoring (paras. (2), (4), and (7), subd. (c), Sec. 315). Accordingly, we think the committee is an agency to which the APA applies.

As to the third criterion, two elements must be met for the uniform standards at issue to be a regulation: they must apply generally and they must implement, interpret, or make specific a law enforced or administered by the agency or that governs its procedures (*Tidewater*, supra, at p. 571; Sec. 11342.600, Gov. C.). Section 315 requires the committee to formulate uniform and specific standards in specified areas that each healing arts board within the department shall use when dealing with substance-abusing licensees, whether or not the board chooses to have a formal diversion program. The uniform standards will not be limited in application to particular instances or individuals but, instead, will apply generally to those licensees. Further, under this statutory scheme, the uniform standards will implement Section 315 and will be enforced and administered by, and will govern the procedures of, each healing arts board that is a member of the committee. Thus, the uniform standards are, in our view, a regulation under the APA.

Lastly, we turn to the fourth criterion, and whether the regulation is exempt from the APA. Certain policies and procedures are expressly exempted by statute from the requirement that they be adopted as regulations pursuant to the APA. In that regard, Section 11340.9 of the Government Code provides as follows:

> "11340.9. This chapter does not apply to any of the following:
>
> "(a) An agency in the judicial or legislative branch of the state government.
>
> "(b) A legal ruling of counsel issued by the Franchise Tax Board or State Board of Equalization.
>
> "(c) A form prescribed by a state agency or any instructions relating to the use of the form, but this provision is not a limitation on any requirement that a regulation be adopted pursuant to this chapter when one is needed to implement the law under which the form is issued.
>
> "(d) A regulation that relates only to the internal management of the state agency.
>
> "(e) A regulation that establishes criteria or guidelines to be used by the staff of an agency in performing an audit, investigation, examination, or inspection, settling a commercial dispute, negotiating a commercial

OCT-27-2011 14:19 From:BP AND CMTE 9163240917 To:574 8666 P.7/11

arrangement, or in the defense, prosecution, or settlement of a case, if disclosure of the criteria or guidelines would do any of the following:

"(1) Enable a law violator to avoid detection.

"(2) Facilitate disregard of requirements imposed by law.

"(3) Give clearly improper advantage to a person who is in an adverse position to the state.

"(f) A regulation that embodies the only legally tenable interpretation of a provision of law.

"(g) A regulation that establishes or fixes rates, prices, or tariffs.

"(h) A regulation that relates to the use of public works, including streets and highways, when the effect of the regulation is indicated to the public by means of signs or signals or when the regulation determines uniform standards and specifications for official traffic control devices pursuant to Section 21400 of the Vehicle Code.

"(i) A regulation that is directed to a specifically named person or to a group of persons and does not apply generally throughout the state."

None of the exemptions contained in the APA can be reasonably construed to apply to the committee or the uniform standards to be used by the healing arts boards. In addition, we are aware of no other applicable exemption.

Thus, because all four of the criteria are met, it is our opinion that the Substance Abuse Coordination Committee is required to adopt the uniform standards pursuant to the rulemaking procedures under the Administrative Procedure Act (Ch. 3.5 (commencing with Sec. 11340), Pt. 1, Div. 3, Title 2, Gov. C.).

Having reached this conclusion, we next turn to whether the healing arts boards are required to use the uniform standards if those standards are properly adopted. In addressing that question, we apply certain established rules of statutory construction. To ascertain the meaning of a statute, we begin with the language in which the statute is framed (*Leroy T. v. Workmen's Comp. Appeals Bd.* (1974) 12 Cal.3d 434, 438; *Visalia School Dist. v. Workers' Comp. Appeals Bd.* (1995) 40 Cal.App.4th 1211, 1220). Significance should be given to every word, and construction making some words surplusage is to be avoided (*Lambert Steel Co. v. Heller Financial, Inc.* (1993) 16 Cal.App.4th 1034, 1040). In addition, effect should be given to statutes according to the usual, ordinary import of the language employed in framing them (*DuBois v. Workers' Comp. Appeals Bd.* (1993) 5 Cal.4th 382, 388).

As set forth above, subdivision (c) of Section 315 provides that "the committee shall formulate uniform and specific standards in each of the following areas that each healing arts board <u>shall</u> <u>use</u> in dealing with substance-abusing licensees, whether or not a board chooses to have a formal diversion program" (emphasis added). Section 19 provides that "shall" is mandatory and "may" is permissive. The word "may" is ordinarily construed as permissive, whereas the word "shall" is ordinarily construed as mandatory (*Common Cause v. Board of Supervisors* (1989) 49 Cal.3d 432, 443).

OCT-27-2011 14:19 From:BP AND CMTE 9163240917 To:574 8666 P.8/11

Here, in Section 315, the Legislature uses the term "shall" rather than "may" in providing that each healing arts board "shall use" the specific and uniform standards adopted by the committee when dealing with substance-abusing licensees. The Legislature uses the term "shall use" as compared to "shall consider," "may consider," or "may use." The Legislature's use of the term "shall" indicates that the healing arts boards are required to use the standards adopted by the committee rather than being provided the discretion to do so. Moreover, as employed in this context, the word "use" implies that the healing arts boards must implement and apply those standards rather than merely considering them. Finally, the use of the term "uniform" suggests that the Legislature intended each board to apply the same standards. If the healing arts boards were not required to use the standards as adopted by the committee, the standards employed by these boards would vary rather than being "uniform."

Notwithstanding the plain meaning of Section 315, one could argue that the enactment of Section 315.4 indicates that the Legislature intended that implementation of the uniform standards by the boards be discretionary. Section 315.4, which was added by Senate Bill No. 1172 of the 2009-10 Regular Session (Ch. 517, Stats. 2010; hereafter S.B. 1172), provides that a healing arts board "may adopt regulations authorizing the board to order a licensee on probation or in a diversion program to cease practice for major violations and when the board orders a licensee to undergo a clinical diagnostic evaluation pursuant to the uniform and specific standards adopted and authorized under Section 315." Section 315.4 could be read to imply that a healing arts board is not required to implement those uniform standards because the board was given discretion to adopt the regulations that would allow that board to implement the standards, if necessary.

It is a maxim of statutory construction that a statute is to be construed so as to harmonize its various parts within the legislative purpose of the statute as a whole (*Wells v. Marina City Properties, Inc.* (1981) 29 Cal.3d 781, 788). As discussed above, we believe that the plain meaning of Section 315 requires the healing arts boards to implement the uniform standards adopted by the committee. Thus, whether Section 315.4 indicates, to the contrary, that the Legislature intended the boards to have discretion in that regard depends upon whether there is a rational basis for harmonizing the two statutes.

In harmonizing Sections 315 and 315.4, we note that S.B. 1172 did not make any changes to Section 315, such as changing the term "shall" to "may" in subdivision (c) of Section 315 or deleting any subdivisions of Section 315. S.B. 1172 did not diminish the scope of the authority provided to the committee to adopt the uniform standards. In fact, the analysis of the Senate Committee on Business, Professions and Economic Development for S.B. 1172, dated April 19, 2010 (hereafter committee analysis), describes the purpose of S.B. 1172 and the enactment of Section 315.4, as follows:

> "The Author points out that pursuant to SB 1441 (Ridley-Thomas, Chapter 548, Statutes of 2008), the DCA was required to adopt uniform guidelines on sixteen specific standards that would apply to substance abusing health care licensees, regardless of whether a board has a diversion program. Although most of the adopted guidelines do not need additional statutes for

> implementation, there are a couple of changes that must be statutorily adopted to fully implement these standards. This bill seeks to provide the statutory authority to allow boards to order a licensee to cease practice if the licensee tests positive for any substance that is prohibited under the terms of the licensee's probation or diversion program, if a major violation is committed and while undergoing clinical diagnostic evaluation." (Committee analysis, at p. 4.)

The committee analysis further provides that the purpose of S.B. 1172 was to grant specific authority to implement those standards and "provide for the full implementation of the Uniform Standards" (committee analysis, at p. 11). The committee analysis at no time implies that the Legislature intended the Section 315 uniform standards to be revised or repealed by S.B. 1172 or that, in enacting Section 315.4, the Legislature intended that the implementation of the uniform standards be subject to the discretion of each healing arts board.

Thus, in our view, Section 315.4 may be reasonably construed in a manner that harmonizes it with Section 315. Specifically, we think that the intent of the Legislature in enacting Section 315.4 was not to make the uniform standards discretionary but to "provide for the full implementation of the Uniform Standards" by providing the authority to adopt regulations where the Legislature believed that further statutory authority was needed. Accordingly, we think implementation by the various healing arts boards of the uniform standards adopted under Section 315 is mandatory.[4]

---

[4] Although Section 108 and Division 2 (commencing with Section 500) authorize the healing arts boards to set standards and adopt regulations (see, for example, Secs. 1224, 1614, 2018, 2531.95, 2615, 2715, 2854, 2930, 3025, 3510, and 3546), it is an axiom of statutory construction that a particular or specific provision takes precedence over a conflicting general provision (Sec. 1859, C.C.P.; *Agricultural Labor Relations Bd. v. Superior Court* (1976) 16 Cal.3d 392, 420, app. dism. *Kubo v. Agricultural Relations Bd.* (1976) 429 U.S. 802; see also Sec. 3534, Civ. C.). Thus, in our view, the specific requirement under Section 315 that the uniform standards be adopted supersedes any general provision authorizing the boards to set standards and adopt regulations.

Thus, it is our opinion that, if the uniform standards are properly adopted by the Substance Abuse Coordination Committee, the healing arts boards are required to implement them.

Very truly yours,

Diane F. Boyer-Vine
Legislative Counsel

By
Lisa M. Plummer
Deputy Legislative Counsel

LMP:syl

State of California

Department of Justice
1300 I Street, Suite 125
P.O. Box 944255
Sacramento, CA 94244-2550

Memorandum

To : Doreathea Johnson
Deputy Director & Chief Counsel
Department of Consumer Affairs
Legal Affairs Division

Date: February 29, 2012
Telephone: (916) 445-7480
FACSIMILE: (916) 324-8835
E-mail: Kathleen.Lynch@doj.ca.gov

From : Kathleen A. Lynch
Deputy Attorney General
Government Law Section
Office of the Attorney General – Sacramento

Subject : Uniform Standards Related to Substance-Abusing Licensees (Bus. & Prof. Code, §§ 315 - 315.4)

Executive Summary

Issues

You asked us to review Legislative Counsel's letter of October 27, 2011, which rendered certain opinions regarding the Substance Abuse Coordination Committee (SACC), which was created by Business and Professions Code section 315 to formulate uniform standards for use by the healing arts boards to deal with substance-abusing licensees. Legislative Counsel opined that:

(1) SACC was required to formally promulgate the uniform standards as regulations pursuant to the Administrative Procedures Act (APA), and

(2) the healing arts boards are required to use such standards under Business and Professions Code sections 315.

Summary of Responses

With respect to question (1), we see things differently from Legislative Counsel, in two respects.

First, we believe that SACC's adoption of uniform standards does not need to undergo the formal rule-making process under the APA. While other laws could potentially require the adoption of regulations when the standards are implemented by the boards (such as statutes governing particular boards or the APA's provisions applicable to disciplinary proceedings), we disagree that section 315 itself triggers the need to issue the uniform standards as regulations.

Second, even assuming the uniform standards must be adopted as regulations, we disagree with Legislative Counsel's apparent assumption that SACC would issue the regulations under section 315. The legislative histories of the relevant laws and statutory authorities of the

individual boards indicate that the boards would issue the regulations to implement the uniform standards.

As to question (2), we agree with Legislative Counsel that the healing arts boards must use the uniform standards under sections 315. A board cannot simply disregard a specific standard because it does not like the standard or because it believes that the standard is too cumbersome. However, some specific uniform standards themselves recognize a board's discretion whether to order a particular action in the first place. Thus, boards still retain authority to determine if they will undertake certain types of actions if permitted under a specific uniform standard.

Statutory Background

In 2008, SACC was legislatively established within the Department of Consumer Affairs to create uniform standards to be used by the healing arts boards when addressing licensees with substance abuse problems. (Bus. & Prof. Code, § 315, subd. (a); Stats. 2008, ch. 548 (SB 1441).) By January 1, 2010, SACC was required to "formulate uniform and specific standards" in 16 identified areas "that each healing arts board shall use in dealing with substance-abusing licensees, whether or not a board chooses to have a formal diversion program." (*Id.* at § 315, subd. (c).) These 16 standards include requirements for: clinical diagnostic evaluation of licensees; the temporary removal of the licensee from practice for clinical diagnostic evaluation and any treatment, and criteria before being permitted to return to practice on a full-time or part-time basis; aspects of drug testing; whether inpatient, outpatient, or other type of treatment is necessary; worksite monitoring requirements and standards; consequences for major and minor violations; and criteria for a licensee to return to practice and petition for reinstatement of a full and unrestricted license. (*Ibid.*) SACC meetings to create these standards are subject to Bagley-Keene Act open meeting requirements. (*Id.* at subd. (b).)

On March 3, 2009, SACC conducted its first public hearing, which included a discussion of an overview of the diversion programs, the importance of addressing substance abuse issues for health care professionals, and the impact of allowing health care professionals who are impaired to continue to practice. (Sen. Com. on Business, Professions, and Economic Development, Analysis of SB 1172 (2010-2011 Reg. Sess.), as amended April 12, 2010.) During this meeting, SACC members agreed to draft uniform guidelines for each of the standards, and during subsequent meetings, roundtable discussions were held on the draft uniform standards, including public comments. (*Ibid.*) In December 2009, the Department of Consumer Affairs adopted the uniform guidelines for each of the standards required by SB 1441. (*Ibid.*) These standards have subsequently been amended by SACC, and the current standards were issued in April of 2011.

According to the author of SB 1441 (Ridley-Thomas), the intent of the legislation was to protect the public by ensuring that, at a minimum, a set of best practices or standards were adopted by health-care-related boards to deal with practitioners with alcohol or drug problems. (Assem. Com. on Business and Professions, Analysis of SB 1441 (2008-2009 Reg. Sess.), as amended June 16, 2008.) The legislation was also meant to ensure uniformity among the

standards established throughout the healing arts licensing boards under the Department of Consumer Affairs. (*Ibid.*) Specifically, the author explains:

> SB 1441 is not attempting to dictate to [the health-related boards] how to run their diversion programs, but instead sets parameters for these boards. The following is true to all of these boards' diversion programs: licensees suffer from alcohol or drug abuse problems, there is a potential threat to allowing licensees with substance abuse problems to continue to practice, actual harm is possible and, sadly, has happened. The failures of the Medical Board of California's (MBC) diversion program prove that there must be consistency when dealing with drug or alcohol issues of licensees.

(Assem. Com. on Business and Professions, Analysis of SB 1441 (2008-2009 Reg. Sess.), as amended June 16, 2008.)

In the view of its author, "[t]his bill allows the boards to continue a measure of self-governance; the standards for dealing with substance-abusing licensees determined by the commission set a floor, and boards are permitted to establish regulations above these levels." (*Ibid.*)

In 2010, additional legislation was enacted to further implement section 315. Specifically, it provided that the healing arts boards, as described in section 315 and with the exception of the Board of Registered Nursing, "may adopt regulations authorizing the board to order a licensee on probation or in a diversion program to cease practice for major violations and when the board orders a licensee to undergo a clinical diagnostic evaluation pursuant to the uniform and specific standards adopted and authorized under Section 315." (Bus. & Prof. Code, § 315.4, subd. (a); Stats. 2010, ch. 517 (SB 1172).) An order to cease practice does not require a formal hearing and does not constitute a disciplinary action. (*Id.* § 315.4 subds. (b), (c).)

According to the author of SB 1172 (Negrete McLoud), this subsequent statute was necessary "because current law does not give boards the authority to order a cease practice." (Sen. Com. on Business, Professions, and Economic Development, Analysis of SB 1172 (2010-2011 Reg. Sess.), as amended April 12, 2010.) The author explains:

> Although most of the adopted guidelines do not need additional statutes for implementation, there are a few changes that must be statutorily adopted to fully implement these standards. [¶] This bill seeks to provide the statutory authority to allow boards to order a licensee to cease practice if the licensee tests positive for any substance that is prohibited under the terms of the licensee's probation or diversion program, if a major violation is committed and while undergoing clinical diagnostic evaluation. [¶] The ability of a board to order a licensee to cease practice under these circumstances provides a delicate balance to the inherent confidentiality of diversion programs. The protection of the public remains the top priority of boards when dealing with substance abusing licensees.

(Senate Third Reading, Analysis of SB 1172 (2010-2011 Reg. Sess.), as amended June 22, 2010.)

Legal Analysis

1a. Section 315 should be construed as not requiring that the uniform standards be adopted as regulations.

Legislative Counsel opined that SACC must adopt the uniform standards as regulations under section 315, because (1) the standards meet the definition of regulations, (2) none of the express exemptions under Government Code section 11340.9 remove them from the APA rule-making process, and (3) section 315 contains no express language precluding application of the rulemaking provisions of the APA. (October 27, 2011 Letter, p. 5.) We have a different view on the threshold issue of whether the standards qualify as a regulation under section 315.

Under the APA, a regulation is defined as "every rule, regulation, order, or standard of general application or the amendment, supplement, or revision of any rule, regulation, order, or standard adopted by any state agency to implement, interpret, or make specific the law enforced or administered by it, or to govern its procedure." (Gov. Code, § 11342.600.) "No state agency shall issue, utilize, enforce, or attempt to enforce any guideline, criterion, bulletin, manual, instruction, order, standard of general application, or other rule, which is a regulation as defined in Section 11342.600, unless [it has been adopted in compliance with the APA]." (*Id.* § 11340.5, subd. (a).) This requirement cannot be superseded or modified by subsequent legislation, unless the statute does so expressly. (*Id.* § 11346, subd. (a).)

An agency standard subject to the APA has two identifying characteristics. First, the agency must intend its rule to apply generally, rather than in a specific case. Second, the rule must "implement, interpret, or make specific the law enforced or administered by [the agency], or . . . govern [the agency's] procedure." (*Morning Star Co. v. State Bd. of Equalization* (2006) 38

Cal.4th 324, 333, quoting *Tidewater Marine Western, Inc. et al. v. Bradshaw* (1996) 14 Cal.4th 557, 571.)

Whether a particular standard or rule is a regulation requiring APA compliance depends on the facts of each case, considering the rule in question, and the applicable statutory scheme. Generally speaking, courts tend to readily find the need for such compliance. We understand that certain healing arts boards have already adopted regulations incorporating the uniform standards. (See, e.g., Cal. Code Regs., tit. 16, § 4147 [Board of Occupational Therapy].) This approach is understandable in light of the usually broad requirement that agency rules be adopted as regulations and, as noted below, may be required by other laws when they are implemented by the boards. Here, however, the wording and intent of section 315 indicate the Legislature did not intend that the initial act of formulating and adopting the uniform standards is within the purview of the formal APA rule-making process.

"The fundamental rule of statutory construction is that the court should ascertain the intent of the Legislature so as to effectuate the purpose of the law." (*Bodell Const. Co. v. Trustees of California State University* (1998) 62 Cal.App.4th 1508, 1515.) In determining that intent, courts "first examine the words of the statute itself. Under the so-called 'plain meaning' rule, courts seek to give the words employed by the Legislature their usual and ordinary meaning. If the language of the statute is clear and unambiguous, there is no need for construction. However, the 'plain meaning' rule does not prohibit a court from determining whether the literal meaning of a statute comports with its purpose. If the terms of the statute provide no definitive answer, then courts may resort to extrinsic sources, including the ostensible objects to be achieved and the legislative history." (*Ibid.* [citations omitted].) Courts "must select the construction that comports most closely with the apparent intent of the Legislature, with a view to promoting rather than defeating the general purpose of the statute, and avoid an interpretation that would lead to absurd consequences." (*Ibid.* [citation omitted].) "The legislative purpose will not be sacrificed to a literal construction of any part of the statute." (*Ibid.*)

In *Paleski v. State Department of Health Services* (2006) 144 Cal.App.4th 713, the Court of Appeal applied these rules of statutory construction and found that the challenged agency criteria were not required to be adopted as regulations under the APA. (*Id.* at pp. 728-729.) In *Paleski*, plaintiff challenged an agency's criteria for the prescription of certain drugs because the department had not promulgated them in compliance with the APA. (*Ibid.*) The statute, however, expressly authorized the criteria to be effectuated by publishing them in a manual. (*Ibid.*) According to the court, the "necessary effect" of this language was that the Legislature did not intend for the broader notice procedure of the APA to apply when the agency issued the criteria. (*Ibid.*)

Similar reasoning should apply here. Under the plain meaning of section 315, SACC was legislatively established to create uniform standards to be used by the healing arts boards when addressing licensees with substance abuse problems. (Bus. & Prof. Code, § 315, subd. (a).) The intent of the legislation was to protect the public and to ensure that minimum standards are met and to ensure uniformity among the standards established throughout the healing arts

licensing boards under the Department of Consumer affairs. (Assem. Com. on Business and Professions, Analysis of SB 1441 (2008-2009 Reg. Sess.), as amended June 16, 2008.) In formulating these uniform standards, SACC was subject to the Bagley-Keene Act, which requires noticed public meetings. Many roundtable discussions were held on the draft uniform standards, including public vetting and public comments. In that way, the affected community learned about the standards and had the opportunity to comment. This is a prime requirement and purpose of the APA rule-making process (see Gov. Code, § 11343 *et seq.*), but it has already been fulfilled by the procedures set forth in section 315. To now require SACC to repeat that process by promulgating the standards as regulations would make little sense and be duplicative.

Nor does the process for the formulation of the standards set forth in section 315 comport with the other purposes and procedures of the APA. During the APA rule-making process, an agency must provide various reasons, justifications, analyses, and supporting evidence for the proposed regulation. (Gov. Code, § 11346.2.) Those provisions and other provisions of the APA are intended to address the proliferation, content, and effect of regulations proposed by administrative agencies. (*Id.* §§ 11340, 11340.1.) Here, the agency is not proposing to adopt the uniform standards. The Legislature has required that the standards adopted by SACC, be uniform, and be used by the boards. Given this statutory mandate that they be implemented, subjecting the uniform standards to substantive review under the APA again makes little sense.[1]

1b. The SACC would not be the rule-making entity, even if the uniform standards would have to be adopted as regulations.

Even assuming that APA compliance was required under section 315, it is doubtful that SACC would carry the responsibility to adopt regulations. The second component of a regulation requires that the rule must "implement, interpret, or make specific the law enforced or administered by [the agency], or . . . govern [the agency's] procedure." (*Morning Star Co.*, *supra*, 38 Cal.4th at p. 333.) Here, SACC was mandated to create the uniform standards to be used by separate boards; the SACC's creation of the uniform standards does not implement,

[1] Even though the standards do not have to be promulgated as regulations by SACC under section 315, this does not mean that certain regulations would not arguably be required on the part of some or all of the boards under other statutory schemes, such as the laws applicable to a particular board or the APA's provisions on quasi-adjudicatory proceedings. This type of analysis would require a fact specific, case-by-case study of each board's practices and its regulatory scheme and may include consideration of: (1) whether a board's statutory authority requires the adoption of regulations related to actions against substance-abusing licensees, (2) whether current regulations conflict with the standards, and (3) whether in an administrative adjudicative setting, the standards are considered "penalties" and thus must be adopted as regulations under section 11425.50, subdivision (e), of the Government Code.

interpret, or make any law more specific. (Bus. & Prof. Code, § 315, subds. (a), (c).) The only express statutory role of the SACC is to determine the uniform standards in the first place.[2]

The boards are then required to use and apply the standards and have much clearer authority to adopt regulations. "Each of the boards [within the Department of Consumer Affairs] exists as a separate unit, and has the function of setting standards, holding meetings, and setting dates thereof, preparing and conducting examinations, passing upon applicants, conducting investigations of violations of laws under its jurisdiction, issuing citations and hold hearings for the revocation of licenses, and the imposing of penalties following such hearings, in so far as these powers are given by statute to each respective board." (Bus. & Prof. Code, § 108.)

The legislative history for section 315 also supports this conclusion. According to its author, section 315 was adopted to protect the public by ensuring that, at a minimum, a set of best practices or standards *were adopted by health care related boards to deal with practitioners with alcohol or drug problems*. (Assem. Com. on Business and Professions, Analysis of SB 1441 (2008-2009 Reg. Sess.), as amended June 16, 2008, emphasis added.)[3] Practically speaking, it would be difficult for the SACC (or the Department of Consumer Affairs) to draft regulations applicable to all boards, given that they are unique and deal with different subject areas, unless such regulations were adopted wholesale, on a one-size-fits-all basis. As explained below, while the healing arts boards must use the standards, they only have to use the ones that apply to their procedures.

Thus, while section 315 does not require regulations to initially adopt the standards, the boards (and not SACC) would more reasonably be tasked with this responsibility.

2. The healing arts boards must use the uniform standards to the extent that they apply.

The original language of section 315 is clear that the standards must be used. (Bus. & Prof. Code, § 315, subd. (a) ["uniform standards that will be used by healing arts boards"], subd. (b) ["uniform standards . . . that each healing arts board shall use in dealing with substance-abusing licenses"].) Legislative Counsel was asked to opine on whether subsequent legislation (Bus. & Prof. Code, § 315.4) somehow made these uniform standards discretionary. We agree with

---

[2] The SACC is a committee formed by various executive officers of healing arts boards and other public officials formed within the Department of Consumer Affairs. (Bus. & Prof. Code, § 315, subds. (a).)

[3] As discussed shortly, the legislative history for follow-up legislation similarly explains that its purpose was to provide statutory authority for some healing arts boards to issue regulations to implement certain of the uniform standards. (Sen. Com. on Business, Professions, and Economic Development, Analysis of SB 1172 (2010-2011 Reg. Sess.), as amended April 12, 2010.)

Legislative Counsel's conclusion that section 315.4 did not make the uniform standards optional. (Oct. 27, 2011, Letter, p. 9.)

Section 315.4 was enacted two years after section 315, and provides that that the healing arts boards, as described in section 315 and with the exception of the Board of Registered Nursing, "may adopt regulations authorizing the board to order a licensee on probation or in a diversion program to cease practice for major violations and when the board orders a licensee to undergo a clinical diagnostic evaluation pursuant to the uniform and specific standards adopted and authorized under Section 315." (Bus. & Prof. Code, § 315.4, subd. (a); Stats. 2010, ch. 517, (SB 1172).) If a board adopts such regulations, there is nothing to indicate that use of uniform standards created under section 315 is optional. Such an interpretation would be contrary to the legislative intent. Section 314.5 was enacted for the limited purpose to give boards the authority to order a licensee to cease practice, as this was not provided for in section 315. (Sen. Com. on Business, Professions, and Economic Development, Analysis of SB 1172 (2010-2011 Reg. Sess.), as amended April 12, 2010.) By no means was the intent to transform the mandatory uniform standards of section 315 into optional suggestions. As the author explains:

> Although most of the adopted guidelines do not need additional statutes for implementation, there are a few changes that must be statutorily adopted to fully implement these standards. [¶] This bill seeks to provide the statutory authority to allow boards to order a licensee to cease practice if the licensee tests positive for any substance that is prohibited under the terms of the licensee's probation or diversion program, if a major violation is committed and while undergoing clinical diagnostic evaluation.

(Senate Third Reading, Analysis of SB 1172 (2010-2011 Reg. Sess.), as amended June 22, 2010.)

In addition, some specific uniform standards themselves recognize a board's discretion whether to order a particular action in the first place. (See e.g. Uniform Standard # 1 ["If a healing arts board orders a licensee . . . to undergo a clinical diagnosis evaluation, the following applies: ... "].) The standards must be applied, however, if a board undertakes a particular practice or orders an action covered by the standards. A determination regarding a board's specific application (or not) of certain uniform standards would have to be based on a fact specific, case-by-case review of each board and its regulatory scheme. However, once a board implements a procedure covered by the uniform standards, it cannot disregard the applicable uniform standard because it disagrees with the standard's substance.

Conclusion

For the reasons stated above, in our view, section 315 can be read to preclude the necessity to adopt regulations when the uniform standards are issued initially. And even if regulations were required under section 315, SACC would not be tasked with this responsibility. We also

believe that the healing arts boards must use the uniform standards where an agency undertakes an action covered by the standards.

Please feel free to contact me if you have any questions or would like to discuss the above.

:KAL

cc: Peter K. Southworth, Supervising Deputy Attorney General

STATE OF CALIFORNIA
dca
DEPARTMENT OF CONSUMER AFFAIRS

STATE AND CONSUMER SERVICES AGENCY • GOVERNOR EDMUND G. BROWN JR.
Executive Office
1625 N. Market Boulevard, Suite S-308, Sacramento, CA 95834
P (916) 574-8200 F (916) 574-8613 | www.dca.ca.gov

December 5, 2011

Lee Goldstein, OD
President
California State Board of Optometry
2450 Del Paso Road, Suite 105
Sacramento, CA 95834

RE: Title 16, CCR section 1575 Uniform Standards Related to Substance Abuse and Disciplinary Guidelines

Dear Dr. Goldstein:

The Department of Consumer Affairs (Department) has concerns regarding the California State Board of Optometry's (Board) proposed regulations, which incorporate the Uniform Standards Regarding Substance-Abusing Licensees (Uniform Standards) into the Board's disciplinary guidelines. I urge the Board to make the following changes to clarify, enhance, and strengthen these regulations:

The regulations as proposed allow the Board to diverge from the Uniform Standards if the licensee establishes that, in his or her particular case, appropriate public protection can be provided with modification or omission of a specific standard as a term of probation. While a Board has the ability to identify which standards are applicable to its program, the implementation of these standards, once deemed applicable, are not discretionary and cannot be deviated from, as they are considered minimum standards. Thus unless the licensee can rebut the presumption that they are a substance-abusing licensee the applicable standard, must be applied. The Department recommends the Board amend the proposed regulation to clarify that the Board does not have the discretion to deviate from the Uniform Standards. Please see attachment for recommended amendments.

Thank you for the opportunity to comment on your proposed rulemaking. If you have any questions, please contact Luis Portillo, Manager, Division of Legislative and Policy Review at (916) 574-7800.

Sincerely,

Brian J. Stiger

BRIAN J. STIGER, Acting Director
Department of Consumer Affairs

BJS:kd

cc: Luis Portillo, Manager, Division of Legislative and Policy Review
Mona Maggio, Executive Officer, California State Board of Optometry

Optometry Board
Uniform Standards Related to Substance Abuse and Disciplinary Guidelines

Amendment Recommendations

§1575. UNIFORM STANDARDS RELATED TO SUBSTANCE ABUSE AND DISCIPLINARY GUIDELINES

1575. Uniform Standards Related to Substance Abuse and Disciplinary Guidelines

In reaching a decision on a disciplinary action under the Administrative Procedures Act (Government Code Section 11400 et seq.), the Board of Optometry shall ~~consider the disciplinary guidelines entitled "Disciplinary Guidelines and Model Disciplinary Orders"~~ comply with the "Uniform Standards Related to Substance Abuse" and consider the Disciplinary Guidelines"(DG-~~3~~ 4, ~~5-99~~ 9-2011) which are hereby incorporated by reference. The Disciplinary Guidelines apply to all disciplinary matters; Uniform Standards apply to a substance abusing licensee.

(a) Notwithstanding subsection (b), ~~D~~deviation from these disciplinary guidelines and orders, including the standard terms of probation, is appropriate where the Board in its sole discretion, determines that the facts of the particular case warrant such a deviation for example: the presence of mitigating factors; the age of the case; evidentiary problems.

(b) If the conduct found to be a violation involves drugs and/or alcohol, the licensee shall be presumed to be a substance-abusing licensee for purposes of section 315 of the Code. If the licensee does not rebut that presumption, then the Uniform Standards for substance abusing licensees shall apply. ~~unless the licensee establishes that, in his or her particular case, appropriate public protection can be provided with modification or omission of a specific standard as a term of probation.~~

Note: Authority cited: Sections 3025 and 3090, Business and Professions Code; and Sections 11400.20 ~~and 11420.21~~, Government Code. Reference: Sections 315, 315.2, 315.4, 480, ~~and~~ 3090, 3091 and 3110, Business and Professions Code; and Sections 11400.20, ~~11400.21~~ and 11425.50(e), Government Code.

***The Department Of Consumer Affairs' proposed deletions are highlighted yellow and in double strikethrough.*

University of San Diego

December 6, 2011

Lee Goldstein, OD, President, and Members
Board of Optometry
2450 Del Paso Road, Suite 105
Sacramento, CA 95834

re: Proposed Amendments to Section 1575, Title 16 of the CCR: Incorporation of SB 1441 Standards Governing Substance-Abusing Licensees into the Board's Disciplinary Guidelines: **Support If Amended**

Dear Dr. Goldstein and Members of the Board:

The Center for Public Interest Law (CPIL) respectfully comments on the Board's attempt to amend section 1575, Title 16 of the CCR, which would incorporate by reference into the Board's disciplinary guidelines the "uniform and specific standards ... that each healing arts board **shall use** in dealing with substance-abusing licensees, whether or not a board chooses to have a formal diversion program." (Business and Professions Code section 315(c), emphasis added.)

CPIL is an academic center of research, teaching, learning, and advocacy in regulatory and public interest law based at the University of San Diego School of Law. Since 1980, the Center has studied the state's regulation of business, professions, and trades, and monitors the activities of most state occupational licensing agencies — including the Board of Optometry and the other regulatory boards within the Department of Consumer Affairs (DCA). CPIL has special expertise in the enforcement programs of these agencies, having worked on "enforcement monitor" projects at the State Bar of California, the Contractors' State License Board, and the Medical Board of California. As Medical Board Enforcement Monitor between 2003–05, I was required to audit the Medical Board's "diversion program" for substance-abusing physicians; that program failed my audit (and my audit followed three failed audits conducted by the former Office of the Auditor General in the 1980s).[1] Two and one-half years after my audit, the Medical Board's diversion program failed a fifth audit conducted by the Bureau of State Audits.[2] These two audits prompted the Medical Board to vote unanimously to abolish its diversion program effective June 30, 2008.

---

[1] Julianne D'Angelo Fellmeth and Thomas A. Papageorge, *Initial Report of the Medical Board Enforcement Monitor* (Nov. 1, 2004) at Chapter XV.

[2] Bureau of State Audits, *Medical Board of California's Physician Diversion Program: While Making Recent Improvements, Inconsistent Monitoring of Participants and Inadequate Oversight of its Service Providers Continue to Hamper Its Ability to Protect the Public* (Audit No. 2006-116R) (June 7, 2007).

Center for Public Interest Law ■ Children's Advocacy Institute ■ Energy Policy Initiatives Center
5998 Alcalá Park, San Diego, CA 92110-2492 ■ Phone: (619) 260-4806 ■ Fax: (619) 260-4753
717 K Street, Suite 509, Sacramento, CA 95814-3408 ■ Phone: (916) 444-3875 ■ Fax: (916) 444-6611
www.cpil.org ■ www.caichildlaw.org ■ www.sandiego.edu/epic
Reply to: ☒ San Diego ☐ Sacramento

As such, I am quite familiar with "diversion programs" for substance-abusing licensees and with SB 1441 (Ridley-Thomas) (Chapter 548, Statutes of 2008) and its addition of section 315 to the Business and Professions Code. That section required the Department of Consumer Affairs to convene the "Substance Abuse Coordination Committee" (SACC) and charged that Committee with developing (as noted above) "uniform and specific standards [in 16 specific areas] that each healing arts board **shall use** in dealing with substance-abusing licensees, whether or not a board chooses to have a formal diversion program." As I'm sure you know, the SACC convened in 2009 and spent almost two years debating and deliberating the language of all 16 standards; CPIL was active before the Committee during its deliberations, which ended in April 2011 when the Committee finalized the standards. In CPIL's view, what remains to be done now is the adoption of the standards by each healing arts board via the Administrative Procedure Act's rulemaking process — which this Board is faithfully attempting through this proceeding.

CPIL has observed various DCA healing arts boards attempt to implement the SB 1441 standards developed by the SACC. Astonishingly, several boards contend that the standards are "discretionary" — that each healing arts board shall "consider" the standards but are not bound by them. CPIL disagrees with this interpretation, as does the Director and General Counsel of the Department of Consumer Affairs; the staff of the Senate Committee on Business, Professions and Economic Development; and the Legislative Counsel in its October 27, 2011 opinion. There is nothing "discretionary" in the language of Business and Professions Code section 315(c); that section explicitly requires each DCA healing arts board to use the standards when dealing with a substance-abusing licensee. The whole point of SB 1441 was to standardize the healing arts boards' treatment of substance-abusing licensees, "whether or not a board chooses to have a formal diversion program." [Note also that the legislative intent language in Section 1 of SB 1441 indicates that "[p]atients would be better protected from substance-abusing licensees if their regulatory boards agreed to and enforced consistent and uniform standards and best practices in dealing with substance-abusing licensees."] The question is how to implement them and apply them properly.

The Board of Optometry has made a valiant attempt toward properly implementing the SB 1441 standards. In its proposed amendments to section 1575, Title 16 of the CCR, the Board has properly distinguished its own "disciplinary guidelines" (from which it has the discretion to deviate in appropriate cases) from the "Uniform Standards Related to Substance Abuse" (which with, as proposed, the Board must "comply"). CPIL has no problem with the first paragraph and subsection (a) of the proposed changes to section 1575.

CPIL also commends the Board for attempting to define the term "substance-abusing licensee" in subsection (b). However, the Board's proposed language goes on to allow a substance-abusing licensee to "establish that, in his or her particular case, appropriate public protection can be provided with modification or omission of a specific standards as a term of probation." CPIL respectfully disagrees with that provision, and suggests that the language of subsection (b) end after the word "apply" in the fourth line.

Either the SB 1441 standards are mandatory or they are not. The unambiguous language and intent of the statute are clear: They are mandatory. Once a licensee is determined to be a substance-abusing licensee, the standards must be applied. Note that some of the standards are internally discretionary and/or need not be used at all in the discretion of the Board — *e.g.*, Standard #4, concerning frequency of drug testing, allows the Board to impose 52-104 drug tests on a substance-abusing licensee during the first year of probation for a substance-abuse-related violation. Standard #5 sets criteria for the use of "group meeting facilitators" if a board chooses to require group meetings, but it does not require any board to mandate group meetings. Standard #7 sets criteria for the use of "worksite monitors" if a board chooses to require worksite monitors, but it does not required any board to mandate worksite monitors. As such, the Standards themselves afford the Board some discretion as to their application.

However, the proposed language of section 1575 is internally inconsistent, and is inconsistent with and unauthorized by Business and Professions Code section 315. The first paragraph of proposed section 1575 states that the Board must "comply" with the Uniform Standards when confronted with a substance-abusing licensee. However, subsection (b) of proposed section 1575 conflicts with the first paragraph by allowing a licensee to "establish" that something less than full application of the Uniform Standards will protect the public. Upon such "establishment," it would appear that the Board could order something less than required by the Uniform Standards. As such, the first paragraph and subsection (b) are internally inconsistent and render the Uniform Standards discretionary — which they clearly are not, according to the unambiguous language of the statute.

CPIL appreciates the complexity of this issue, and salutes the efforts and good will of this Board in attempting to properly implement the Uniform Standards. However, Business and Professions Code section 315 requires this Board to use the Standards as they have been developed. Nothing in the statute or the Standards allows the Board to vary from the standards upon a showing by a substance-abusing licensee that something less than what is required by the Standards would protect the public. CPIL urges the Board to strike all the language in subsection (b) after the word "apply" in the fourth line of the subsection (see attached).

Thank you for your consideration of these comments.

Sincerely,

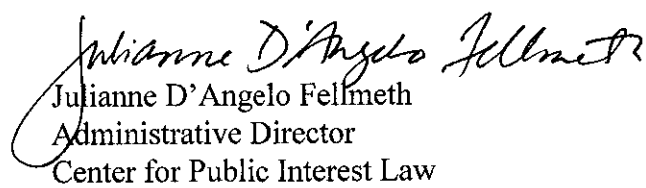

Julianne D'Angelo Fellmeth
Administrative Director
Center for Public Interest Law

cc: Brian Stiger, Director, Department of Consumer Affairs
Doreathea Johnson, General Counsel, Department of Consumer Affairs
Michael Santiago, Legal Counsel, Department of Consumer Affairs
Bill Gage, Chief Consultant, Senate Committee on Business, Professions and Economic Development

BOARD OF OPTOMETRY

PROPOSED LANGUAGE

Amend section 1575 in Division 15 of Title 16 of the California Code of Regulations to read as follows:

§ 1575. Uniform Standards Related to Substance Abuse and Disciplinary Guidelines.

In reaching a decision on a disciplinary action under the Administrative Procedures Act (Government Code Section 11400 et seq.), the Board of Optometry shall ~~consider the disciplinary guidelines entitled "Disciplinary Guidelines and Model Disciplinary Orders"~~ comply with the "Uniform Standards Related to Substance Abuse and consider the Disciplinary Guidelines (DG-~~3~~ 4, ~~5-99~~ 9-2011) which are hereby incorporated by reference. The Disciplinary Guidelines apply to all disciplinary matters; the Uniform Standards apply to a substance abusing licensee.

(a) Notwithstanding subsection (b), ~~D~~deviation from these disciplinary guidelines and orders, including the standard terms of probation, is appropriate where the Board in its sole discretion determines that the facts of the particular case warrant such a deviation - for example: the presence of mitigating factors; the age of the case; evidentiary problems.

(b) If the conduct found to be a violation involves drugs and/or alcohol, the licensee shall be presumed to be a substance-abusing licensee for purposes of section 315 of the Code. If the licensee does not rebut that presumption, then the Uniform Standards for a substance abusing licensees shall apply ~~unless the licensee establishes that, in his or her particular case, appropriate public protection can be provided with modification or omission of a specific standard as a term of probation~~.

Note: Authority cited: Sections 3025 and 3090, Business and Professions Code; and Section~~s~~ 11400.20 ~~and 11420.21~~, Government Code. Reference: Sections 315, 315.2, 315.4, 480, ~~and~~ 3090, 3091 and 3110, Business and Professions Code; and Sections 11400.20~~, 11400.21~~ and 11425.50(e), Government Code.

BOARD OF OPTOMETRY

MODIFIED TEXT

Changes to the originally proposed language are shown by the double underline for new text and underline with strikeout for deleted text.

Amend Section 1575 in Division 15 of Title 16 of the California Code of Regulations to read as follows:

§1575. Uniform Standards Related to Substance Abuse and Disciplinary Guidelines.

In reaching a decision on a disciplinary action under the Administrative Procedures Act (Government Code Section 11400 et seq.), the Board of Optometry shall ~~consider the disciplinary guidelines entitled "Disciplinary Guidelines and Model Disciplinary Orders"~~ comply with the "Uniform Standards Related to Substance Abuse and consider the Disciplinary Guidelines (DG-~~3~~ 4, ~~5-99~~ ~~9-2011~~ 5-2012) which are hereby incorporated by reference. The Disciplinary Guidelines apply to all disciplinary matters; the Uniform Standards apply to a substance abusing licensee.

(a) Notwithstanding subdivision (b), ~~D~~deviation from these disciplinary guidelines and orders, including the standard terms of probation, is appropriate where the Board in its sole discretion determines that the facts of the particular case warrant such a deviation -for example: the presence of mitigating factors; the age of the case; evidentiary problems.

(b) If the conduct found to be a violation involves drugs and/or alcohol, the licensee shall be presumed to be a substance-abusing licensee for purposes of Section 315 of the Code. If the licensee does not rebut that presumption, then the Uniform Standards for a substance abusing licensees shall apply. ~~unless the licensee establishes that, in his or her particular case, appropriate public protection can be provided with modification or omission of a specific standard as a term of probation.~~

Note: Authority cited: Sections 3025 and 3090, Business and Professions Code; and Section~~s~~ 11400.20 ~~and 11420.21~~, Government Code. Reference: Sections 315, 315.2, 315.4, 480, ~~and~~ 3090, 3091 and 3110, Business and Professions Code; and Sections 11400.20~~, 11400.21~~ and 11425.50(e), Government Code.

CALIFORNIA STATE BOARD OF OPTOMETRY

UNIFORM STANDARDS RELATED TO SUBSTANCE ABUSE

&

DISCIPLINARY GUIDELINES

(DG 4, 05-2012)

"Protection of the Public Shall be the Highest Priority"
Business and Professions Code, ~~Section~~§ 3010.1

2450 Del Paso Road, Suite 105
Sacramento, CA 95834
T: 916-575-7170 | F: 916-575-7292
optometry@dca.ca.gov

TABLE OF CONTENTS

INTRODUCTION 4

PUBLIC RECORD 4

COST RECOVERY 4

PROBATION MONITORING PURPOSE 5

CITATIONS 5

STIPULATED SETTLEMENTS 5

DISCIPLINARY GUIDELINES 6

EVIDENCE IN AGGRAVATION/MITIGATION OF DISCIPLINE 6

DISCIPLINARY GUIDELINES SUMMARY FOR USE BY 7

ADMINISTRATIVE LAW JUDGES 7

UNIFORM STANDARDS RELATED TO SUBSTANCE ABUSE AND DISCIPLINARY GUIDELINES 8

UNIFORM STANDARDS FOR THOSE LICENSEES WHOSE LICENSE IS ON PROBATION DUE TO SUBSTANCE ABUSE PROBLEM 8

1. CLINICAL DIAGNOSTIC EVALUATION 8

2. REMOVAL FROM PRACTICE PENDING CLINICAL DIAGNOSTIC EVALUATION 9

3. BOARD COMMUNICATION WITH PROBATIONER'S EMPLOYER 9

4. DRUG TESTING STANDARDS 9

5. PARTICIPATION IN GROUP SUPPORT MEETINGS 11

6. DETERMINING WHAT TREATMENT IS NECESSARY 12

7. WORKSITE MONITOR REQUIREMENTS 12

8. PROCEDURE FOR POSITIVE TESTING 13

9-10. MAJOR/MINOR VIOLATIONS & CONSEQUENCES 13

11. PETITION FOR RETURN TO PRACTICE 14

12. PETITION FOR REINSTATEMENT 14

PROBATIONARY TERMS AND CONDITIONS 15

MODEL DISCIPLINARY ORDERS 15

MODEL PROBATIONARY ORDERS 15

STANDARD TERMS AND CONDITION 16

STANDARD ALCOHOL/DRUG CONDITIONS 22

OPTIONAL CONDITIONS 25

RECOMMENDED DISCIPLINE BASED ON VIOLATION 38

INTRODUCTION

The California State Board of Optometry's (hereafter Board) mission is to serve the public and optometrists by promoting and enforcing laws and regulations, which protect the health and safety of California's consumers and to ensure high quality care.

In keeping with its mandate to protect the consumer of optometric services from the unsafe, incompetent and/or negligent optometrists, the Board ~~of Optometry~~ has adopted the following recommended guidelines for disciplinary orders and conditions of probation for violations of the Optometry Practice Act.

The Board's disciplinary guidelines were designed for use by Administrative Law Judges, attorneys from the Office of the Attorney General, licensees, Board staff and others involved in the Board's disciplinary process and are to be followed in all disciplinary actions involving the Board. The Board has the final authority over the disposition of its cases, and to complete its work, it utilizes the Office of the Attorney General and the Office of Administrative Hearings.

This manual includes factors to be considered in aggravation or mitigation, guidelines to be used by Administrative Law Judges for a violation(s) of specific statutes, and standard and specialty probationary terms and conditions.

If, at the time of hearing, the Administrative Law Judge finds that the Respondent for any reason is not capable of safe practice, the Board favors outright revocation of the license. If, however, the Respondent has demonstrated a capacity to practice optometry safely, a stayed revocation order with probation is recommended.

Suspension of a license may also be appropriate where the public may be better protected if the practice of the optometrist is suspended in order to correct deficiencies in skills, education, or personal rehabilitation.

The Board recognizes that these recommended penalties and conditions of probation are merely guidelines and that aggravating or mitigating circumstances and other factors may necessitate deviation from these guidelines in particular cases.

PUBLIC RECORD

It is the Board's policy that all letters of license denial, citations issued and final decisions will be published as a matter of public record and shall be available on the Internet, pursuant to Business and Professions Code, section 27.

COST RECOVERY

The Board seeks recovery of all investigative and prosecution costs in all disciplinary cases. The costs include all charges incurred from the Office of the Attorney General, the Division of Investigation, and Board services, including, but not limited to, expert consultant opinions and services, pursuant to Business and Professions Code, section 125.3. The Board seeks recovery of these costs because the burden for payment of the costs of investigation and prosecution of disciplinary cases should fall upon those whose proven conduct required investigation and prosecution, not upon the profession as a whole.

PROBATION MONITORING PURPOSE

The purpose of the probation monitoring program is to maintain public protection by proactively monitoring probationers to ensure terms and conditions are met. The Board will work to:

1) Allow for the probationer's rehabilitation if that is his/her choice;
2) Allow the probationer an opportunity to practice in a professional manner with restrictions and guidance from a community support system and designated probation monitor to prevent future occurrences; and
3) Allow for education of the individual as to the responsibilities, requirements and professionalism mandated of an optometrist.

It is the policy of the Board that if a probationer is found to be in violation of any term of probation at any time during the probation period, the Board shall immediately be notified of the violation so that disciplinary action may be considered.

CITATIONS

The Board has the authority to issue citations and fines for violations of several sections of the Board of Optometry Practice Act and its regulations. Citations issued may include an order for abatement, a fine, or both. Citations are issued at the discretion of the Board. The issuance of a citation is separate from and may be in addition to any other administrative discipline, civil remedies, or criminal penalties. (California Code of Regulations section 1399.380(h)). Any prior citation may be used in future actions as aggravating evidence.

STIPULATED SETTLEMENTS

The Board will consider stipulated settlements to promote cost effectiveness and to expedite disciplinary decisions if such agreements are consistent with the Board's mandate.

DISCIPLINARY GUIDELINES
2011~~1~~2 EDITION

EVIDENCE IN AGGRAVATION/MITIGATION OF DISCIPLINE

The following are examples of aggravating and mitigating circumstances which may be considered by Administrative Law Judges in providing for discipline in their proposed decisions:

EVIDENCE IN AGGRAVATION OF DISCIPLINE

1. Patient's trust, health, safety or well-being was jeopardized.
2. Patient's or employer's trust violated (e.g., theft, embezzlement, fraud).
3. History of prior discipline.
4. Patterned behavior: Respondent has a history of one or more violations or convictions related to the current violation(s).
5. Perjury on official Board forms.
6. Violent nature of crime or act.
7. Violation of Board Probation.
8. Failure to provide a specimen for testing in violation of terms and conditions of probation.
9. Commission of any crime against a minor, or while knowingly in the presence of, or while caring for, a minor.

EVIDENCE IN MITIGATION OF DISCIPLINE

1. Recognition by Respondent of his or her wrongdoing and demonstration of corrective action to prevent recurrence.
2. Respondent was forthcoming and reported violation or conviction to the Board.
3. A substantial amount of time since the violation or conviction occurred.
4. No prior criminal or disciplinary history.

DISCIPLINARY GUIDELINES SUMMARY FOR USE BY ADMINISTRATIVE LAW JUDGES

~~State of California Board of Optometry~~
~~Disciplinary Guidelines~~
~~and Model Disciplinary Orders~~
~~(May 1999)~~

To establish consistency in disciplin~~ary~~e ~~penalties~~ for similar offenses on a statewide basis, the Board of Optometry has adopted these uniform disciplinary guidelines for particular violations. This document, designed for use by administrative law judges, attorneys, optometrists and ultimately the Board, shall be revised from time to time following public hearing by the Board and will be disseminated to interested parties upon request.

~~This document is divided into three sections as follows: (1) Disciplinary guidelines for specific violations of the Optometry Practice Act and other related laws; (2) model language for use in crafting disciplinary orders; and (3) guidelines for the imposition and assessment of administrative fines and citations. The Board recognizes that these penalties and conditions of probation are merely guidelines and that mitigating or aggravating circumstances may necessitate variations in individual cases.~~

Additional copies of this document may be obtained by contacting the Board of Optometry at its office~~s~~ in Sacramento, California. There may be a charge assessed sufficient to cover the cost of production and dissemination of copies. In determining the appropriate discipline, consideration should be given to any mitigating or aggravating circumstances. All decisions shall include cost recovery in accordance with Business and Professions Code section 125.3.

~~Disciplinary Guidelines~~

The Board recognizes that these penalties and conditions of probation are merely guidelines and that mitigating or aggravating circumstances may necessitate deviations. If there are deviations or omissions from the guidelines, the Board would request that the Administrative Law Judge hearing the matter include some statement of this in the proposed decision so that the circumstances can be better understood and evaluated by the Board upon review of the proposed decision and before its ultimate action is taken.

~~For purposes of this document terms and conditions of probation are divided into two general categories: (1) General Conditions which are those conditions of probation which will generally appear in all cases involving probation as a standard term and condition; and (2) Specific Conditions which are those that address the specific circumstances of the case and require discretion to be imposed depending on the nature and circumstances of a particular case. B&P refers to the California Business and Professions Code. CCR refers to the California Code of Regulations~~

These guidelines are incorporated by reference in ~~Section~~ §1575 of Division 15 of Title 16 of the California Code of Regulations.

§1575. UNIFORM STANDARDS RELATED TO SUBSTANCE ABUSE AND DISCIPLINARY GUIDELINES

§1575. Uniform Standards Related to Substance Abuse and Disciplinary Guidelines
In reaching a decision on a disciplinary action under the Administrative Procedures Act (Government Code Section 11400 et seq.), the Board of Optometry shall ~~consider the disciplinary guidelines entitled "Disciplinary Guidelines and Model Disciplinary Orders"~~ comply with the "Uniform Standards Related to Substance Abuse" and consider the "Disciplinary Guidelines"(DG-~~3~~ 4, ~~5-99~~ ~~9-2011~~ 5-2012) which are hereby incorporated by reference. The Disciplinary Guidelines apply to all disciplinary matters; Uniform Standards apply to a substance abusing licensee.

(a) Notwithstanding subdivision (b), ~~D~~deviation from these disciplinary guidelines and orders, including the standard terms of probation, is appropriate where the Board in its sole discretion determines that the facts of the particular case warrant such a deviation for example: the presence of mitigating factors; the age of the case; evidentiary problems.

(b) If the conduct found to be a violation involves drugs and/or alcohol, the licensee shall be presumed to be a substance-abusing licensee for purposes of Section 315 of the Code. If the licensee does not rebut that presumption, then the Uniform Standards for substance abusing licensees shall apply. ~~unless the licensee establishes that, in his or her particular case, appropriate public protection can be provided with modification or omission of a specific standard as a term of probation.~~

Note: Authority cited: Sections 3025 and 3090, Business and Professions Code; and Sections 11400.20 ~~and 11420.21~~, Government Code. Reference: Sections 315, 315.2, 315.4, 480, ~~and~~ 3090, 3091 and 3110, Business and Professions Code; and Sections 11400.20, ~~11400.21~~ and 11425.50(e), Government Code.

UNIFORM STANDARDS FOR THOSE LICENSEES ~~WHOSE LICENSE IS ON PROBATION DUE TO SUBSTANCE ABUSE PROBLEM~~ WHO ARE SUBSTANCE ABUSING LICENSEES

Pursuant to ~~Senate Bill 1441~~Business and Professions Code §315, the following standards shall be adhered to in all cases in which an optometrist's license is placed on probation ~~due, in part, to substance abuse~~ because the optometrist is a substance abusing licensee. These standards are not guidelines and shall be followed in all instances, except that the Board may impose more restrictive conditions if necessary to protect the public.

1. CLINICAL DIAGNOSTIC EVALUATION

If a clinical diagnostic evaluation is ordered, the following applies:

The clinical diagnostic evaluation shall be conducted by a licensed practitioner who:

- holds a valid, unrestricted license, which includes scope of practice to conduct a clinical diagnostic evaluation;
- has three (3) years experience in providing evaluations of health professionals with substance abuse disorders; and,
- is approved by the Board.

The clinical diagnostic evaluation shall be conducted in accordance with acceptable professional standards for conducting substance abuse clinical diagnostic evaluations. The clinical diagnostic evaluation report shall:

- set forth, in the evaluator's opinion, whether the licensee has a substance abuse problem;
- set forth, in the evaluator's opinion, whether the licensee is a threat to himself/herself or others; and,
- set forth, in the evaluator's opinion, recommendations for substance abuse treatment, practice restrictions, or other recommendations related to the licensee's rehabilitation and safe practice.

The evaluator shall not have a financial relationship, personal relationship, or business relationship with the licensee within the last five years. The evaluator shall provide an objective, unbiased, and independent evaluation.

If the evaluator determines during the evaluation process that a licensee is a threat to himself/herself or others, the evaluator shall notify the Board within 24 hours of such a determination.

For all evaluations, a final written report shall be provided to the Board no later than ten (10) days from the date the evaluator is assigned the matter unless the evaluator requests additional information to complete the evaluation, not to exceed 30 days.

2. REMOVAL FROM PRACTICE PENDING CLINICAL DIAGNOSTIC EVALUATION

The Board shall order the licensee to cease practice during the clinical diagnostic evaluation pending the results of the clinical diagnostic evaluation and review by Board staff.

While awaiting the results of the clinical diagnostic evaluation required in Uniform Standard #1, the licensee shall be randomly drug tested at least two (2) times per week.

After reviewing the results of the clinical diagnostic evaluation, and the criteria below, a ~~diversion or~~ probation manager shall determine, whether or not the licensee is safe to return to either part-time or full-time practice. However, no licensee shall return to practice until he or she has at least 30 days of negative drug tests.

- the license type;
- the documented length of sobriety/time that has elapsed since substance use;
- the scope, pattern of use, and history of drug/alcohol use;
- the treatment history;
- the licensee's medical history and current medical condition;
- the nature, duration and severity of substance abuse, and
- whether the licensee is a threat to himself/herself or the public.

3. BOARD COMMUNICATION WITH PROBATIONER'S EMPLOYER

The licensee shall provide to the Board the names, physical addresses, mailing addresses, and telephone numbers of all employers and supervisors and shall give specific written consent that the licensee authorizes the Board and the employers and supervisors to communicate regarding the licensee's work status, performance, and monitoring.

4. DRUG TESTING STANDARDS

The following standards shall govern all aspects of testing required to determine abstention from alcohol and drugs for any person whose license is placed on probation ~~or in a diversion program~~ due to substance use:

Testing Frequency Schedule

A Board may order a licensee to drug test at anytime. Additionally, each licensee shall be tested RANDOMLY in accordance with the schedule below:

Level	**Segment of Probation/Diversion**	**Minimum Range of Number of Random Tests**
I	Year 1	52-104 per year
II*	Year 2+	36-104 per year

*The minimum range of 36-104 tests identified in level II is for the second year of probation and each year thereafter.

Nothing precludes the Board from increasing the number of random tests for any reason. If the Board finds or suspects that a licensee has committed a violation of the Board's testing program or committed a Major Violation, as identified in Uniform Standard 10, the Board may reestablish the testing cycle by placing that licensee at the beginning of level I in addition to any other disciplinary action that may be pursued.

Exception to Testing Frequency Schedule

I. PREVIOUS TESTING/SOBRIETY

In cases where the Board has evidence that a licensee has participated in a treatment or monitoring program requiring random testing, prior to being subject to testing by the Board, the Board may give consideration to that testing in altering the testing frequency schedule so that it is equivalent to this standard.

II. VIOLATION(S) OUTSIDE OF EMPLOYMENT

An individual whose license is placed on probation for a single conviction or incident or two convictions or incidents, spanning greater than seven years from each other, where those violations did not occur at work or while on the licensee's way to work, where alcohol or drugs were a contributing factor, may bypass Level I and participate in Level II of the testing frequency schedule.

III. NOT EMPLOYED IN HEALTH CARE FIELD

The Board may reduce testing frequency to a minimum of 12 times per year for any person who is not practicing OR working in any health care field. If a reduced testing frequency schedule is established for this reason, a licensee shall notify and secure the approval of the Board. Prior to returning to any healthcare employment, the licensee shall be subject to Level I testing frequency for at least 60 days. At such time the person returns to employment, if the licensee has not previously met the standard, the licensee shall be subject to completing a full year at Level I of the testing frequency schedule, otherwise Level II testing shall be in effect.

IV. TOLLING

A Board may postpone all testing for any person whose probation is placed in a tolling status if the overall length of the probationary period is also tolled. A licensee shall notify the Board upon the licensee's return to California and shall be subject to testing as provided in this standard. If the licensee returns to employment in a health care field, and has not previously met the standard, the licensee shall be subject to completing a full year at Level I of the testing frequency schedule, otherwise Level II testing shall be in effect.

V. SUBSTANCE USE DISORDER NOT DIAGNOSED

In cases where no current substance use disorder diagnosis is made, a lesser period of monitoring and toxicology screening may be adopted by the Board, but no less than 24 times per year.

OTHER DRUG STANDARDS

Drug testing may be required on any day, including weekends and holidays.

The scheduling of drug tests shall be done on a random basis, preferably by a computer program, so that a licensee can make no reasonable assumption of when he/she will be tested again. The Board should be prepared to report data to support back-to-back testing as well as, numerous different intervals of testing.

Licensees shall be required to make daily contact with the Board to determine if drug testing is required.

Licensees shall be drug tested on the date of notification as directed by the Board.

Specimen collectors must either be certified by the Drug and Alcohol Testing Industry Association or have completed the training required to serve as a collector for the U.S. Department of Transportation. Specimen collectors must adhere to the current U.S. Department of Transportation Specimen Collection Guidelines.

Testing locations shall comply with the Urine Specimen Collection Guidelines published by the U.S. Department of Transportation, regardless of the type of test administered.

Collection of specimens shall be observed.
Prior to vacation or absence, alternative drug testing location(s) must be approved by the Board.

Laboratories shall be certified and accredited by the U.S. Department of Health and Human Services.

A collection site must submit a specimen to the laboratory within one (1) business day of receipt. A chain of custody shall be used on all specimens. The laboratory shall process results and provide legally defensible test results within seven (7) days of receipt of the specimen. The Board will be notified of non-negative test results within one (1) business day and will be notified of negative test results within seven (7) business days.

The Board may use other testing methods in place of, or to supplement biological fluid testing, if the alternate testing method is appropriate.

5. PARTICIPATION IN GROUP SUPPORT MEETINGS

When determining the frequency of required group meeting attendance, the Board shall give consideration to the following:

- recommendation of the clinical diagnostic evaluation pursuant to Uniform Standard #1;
- the licensee's history;
- the documented length of sobriety/time that has elapsed since substance use;
- the recommendation of the clinical evaluator;
- the scope and pattern of use;
- the licensee's treatment history; and,
- the nature, duration, and severity of substance abuse.

Group Meeting Facilitator Qualifications and Requirements:

1. The meeting facilitator must have a minimum of three (3) years experience in the treatment and rehabilitation of substance abuse, and shall be licensed or certified by the state or other nationally certified organizations.
2. The meeting facilitator must not have had a financial relationship, personal relationship, or business relationship with the licensee in the last five (5) years.

3. The group meeting facilitator shall provide to the Board a signed document showing the licensee's name, the group name, the date and location of the meeting, the licensee's attendance, and the licensee's level of participation and progress.
4. The facilitator shall report any unexcused absence within 24 hours.

6. DETERMINING WHAT TREATMENT IS NECESSARY

In determining whether inpatient, outpatient, or other type of treatment is necessary, the Board shall consider the following criteria:

- license type;
- licensee's history;
- documented length of sobriety/time that has elapsed since substance abuse;
- scope and pattern of substance use;
- licensee's treatment history;
- licensee's medical history and current medical condition;
- nature, duration, severity of substance abuse, and
- threat to self or the public.

7. WORKSITE MONITOR REQUIREMENTS

If the Board determines that a worksite monitor is necessary for a particular licensee, the worksite monitor shall meet the following requirements to be considered for approval by the Board.

1. The worksite monitor shall not have any financial, personal, or a familial relationship with the licensee, or any other relationship that could reasonably be expected to compromise the ability of the monitor to render impartial and unbiased reports to the Board. If it is impractical for anyone but the licensee's employer to serve as the worksite monitor, this requirement may be waived by the Board; however, under no circumstances shall a licensee's worksite monitor be an employee of the licensee.

2. The worksite monitor's license shall include the scope of practice of the licensee that is being monitored or be another health care professional if no monitor with like practice is available.

3. The worksite monitor shall have an active unrestricted license, with no disciplinary action within the last five (5) years.

4. The worksite monitor shall sign an affirmation that he or she has reviewed the terms and conditions of the licensee's disciplinary order and/or contract and agrees to monitor the licensee as set forth by the Board.

5. The worksite monitor must adhere to the following required methods of monitoring the licensee:
   a. Have face-to-face contact with the licensee in the work environment on a frequent basis as determined by the Board, at least once per week.
   b. Interview other staff in the office regarding the licensee's behavior, if applicable.
   c. Review the licensee's work attendance.

Reporting by the worksite monitor to the Board shall be as follows:

1. Any suspected substance abuse must be verbally reported to the Board and the licensee's employer within one (1) business day of occurrence. If occurrence is not during the Board's normal business hours the verbal report must be within one (1) hour of the next business day. A written report shall be submitted to the Board within 48 hours of occurrence.

2. The worksite monitor shall complete and submit a written report monthly or as directed by the Board. The report shall include:
    - the licensee's name;
    - license number;
    - worksite monitor's name and signature;
    - worksite monitor's license number;
    - worksite location(s);
    - dates licensee had face-to-face contact with monitor;
    - staff interviewed, if applicable;
    - attendance report;
    - any change in behavior and/or personal habits;
    - any indicators that can lead to suspected substance abuse.

The licensee shall complete the required consent forms and sign an agreement with the worksite monitor and the Board to allow the Board to communicate with the worksite monitor.

8. PROCEDURE FOR POSITIVE TESTING

When a licensee tests positive for a banned substance:

1. The Board shall order the licensee to cease practice;

2. The Board shall contact the licensee and instruct the licensee to leave work; and

3. The Board shall notify the licensee's employer, if any, and worksite monitor, if any, that the licensee may not practice.

Thereafter, the Board will determine whether the positive drug test is in fact evidence of prohibited use. If so, proceed to Standard #9. If not, the Board shall immediately lift the cease practice order.

In determining whether the positive test is evidence of prohibited use, the Board will engage in the following, as applicable:

1. Consult the specimen collector and the laboratory;
2. Communicate with the licensee and/or any physician who is treating the licensee; and
3. Communicate with any treatment provider, including group facilitator(s).

9-10. MAJOR/MINOR VIOLATIONS & CONSEQUENCES

Major violations include, but are not limited to the following:

1. Failure to complete a Board-ordered program or evaluation;
2. Committing two or more minor violations of probation;
3. Treating a patient while under the influence of drugs or alcohol;
4. Committing any drug or alcohol offense, or any other offense that may or may not be related to drugs or alcohol, that is a violation of the Business and Professions Code or state or federal law;
5. Failure to appear or provide a sample in accordance with the "biological fluid testing" term and condition;
6. Testing positive for a banned substance;
7. Knowingly using, making, altering or possessing any object or product in such a way as to defraud a drug test designed to detect the presence of alcohol or a controlled substance.
8. Failure to adhere to any suspension or restriction in practice.

Consequences of a major violations include, but are not limited to the following:

1. Licensee will be ordered to cease practice.

a) the licensee must undergo a new clinical diagnostic evaluation (if applicable);
b) the licensee must test *negative* for a least a month of continuous drug testing before being allowed to practice.

2. Termination of a contract/agreement.
3. Referral for disciplinary action, such as suspension, revocation, or other action as determined by the Board.

Minor violations include, but are not limited to the following:

1. Failure to submit complete and required documentation in a timely manner;
2. Unexcused absence at required meetings;
3. Failure to contact a monitor as required;
4. Failure to submit cost recovery or monthly probation monitoring costs timely.
5. Any other violation that does not present a threat to the licensee or public.

Consequences of minor violations include, but are not limited to the following:

1. Removal from practice;
2. Practice limitations;
3. Required supervision;
4. Increased documentation;
5. Issuance of citation and fine or a warning notice;
6. Required re-evaluation/testing;
7. Other action as determined by the Board.

11. PETITION FOR RETURN TO PRACTICE

"Petition" as used in this standard is an informal request as opposed to a "Petition for Modification" under the Administrative Procedure Act.

The licensee shall meet the following criteria before submitting a request (petition) to return to full time practice:

1. Sustained compliance with current recovery program;
2. The ability to practice safely as evidenced by current work site reports, evaluations, and any other information relating to the licensee's substance abuse; and
3. Negative drug screening reports for at least six (6) months, two (2) positive worksite monitor reports, and complete compliance with other terms and conditions of the program.

12. PETITION FOR REINSTATEMENT

"Petition for Reinstatement" as used in this standard is an informal request as opposed to a "Petition for Reinstatement" under the Administrative Procedure Act.

The licensee must meet the following criteria to request (petition) for a full and unrestricted license:

1. Sustained compliance with the terms of the disciplinary order, if applicable;
2. Successful completion of recovery program, if required;
3. A consistent and sustained participation in activities that promote and support recovery including, but not limited to, ongoing support meetings, therapy, counseling, relapse prevention plan, and community activities;
4. Ability to practice safely; and
5. Continuous sobriety for three (3) to five (5) years.

PROBATIONARY TERMS AND CONDITIONS

MODEL DISCIPLINARY ORDERS

Revocation-Single Cause
Certificate No. (Ex.: 12345) issued to ~~r~~Respondent (Ex: John Smith. O.D.) is revoked. Cost Recovery in the amount of (Ex: 5,000) is due within 90 calendar days of the effective date of this decision or within a Board approved payment plan.

Revocation - Multiple Causes
Certificate No. ____issued to ~~r~~Respondent _____ is revoked pursuant to Determination of Issues (Ex: II. and III) separately and for all of them. Cost Recovery (if any) in the amount of (Ex: 5,000) is due within 90 calendar days of the effective date of this decision or within a Board approved payment plan.

Suspension - Single Cause
Certificate No. __ issued to ~~r~~Respondent _____ is suspended for a period of (Ex: 30 calendar days/one year).

Suspension - Multiple Causes (run concurrently)
Certificate No. issued to ~~r~~Respondent _____ is suspended pursuant to Determination of Issues _____ , separately and for all of them. All suspensions shall run concurrently.

Suspension - Multiple Causes (run consecutively)
Certificate No. issued to ~~r~~Respondent _____ is suspended (Ex: 30 calendar days) pursuant to Determination of Issues . These suspensions shall run consecutively, for a total period of (Ex: 90 calendar days).

Standard Stay Order
However (revocation/suspension) is stayed and ~~r~~Respondent is placed on probation for (Ex: three) years upon the following terms and conditions:

MODEL PROBATIONARY ORDERS

The following introductory language is to be included in decisions that place the Respondent's license on probation.

IT IS HEREBY ORDERED that (INSERT APPROPRIATE LICENSE CATEGORY) Number (INSERT LICENSE NUMBER) issued to Respondent is revoked. However, the revocation is stayed and Respondent's (INSERT LICENSE CATEGORY) is placed on probation for (INSERT NUMBER OF YEARS) years on the following conditions.

In order to provide clarity and consistency in its decisions, the following language should be used in proposed decisions or stipulated agreements for applicants, and for petitioners for reinstatement who are issued a license that is placed on probation.

Applicants who are placed on probation:
The application of Respondent _____ for licensure is hereby granted. Upon successful completion of the licensure examination and all other licensing requirements including payment of all fees and evaluation of the application, a license shall be issued to Respondent. Said license shall immediately be revoked, the order of revocation stayed and Respondent's license placed on probation for a period of _____ years on the following conditions:

Reinstatement of licensure with conditions of probation:

The application of Respondent _____ for reinstatement of licensure is hereby granted. A license shall be issued to Respondent. Said license shall immediately be revoked, the order of revocation stayed and Respondent's license placed on probation for a period of _____ years on the following conditions:

NOTE: If cost recovery was ordered in the revocation or surrender of a license and the cost recovery has not been paid in full by a petitioner, a probation condition requiring payment of the original cost recovery on a payment plan must be included in the reinstatement and decision.

STANDARD TERMS AND CONDITIONS~~; TO BE INCLUDED IN ALL CASES OF PROBATION~~

~~General Probationary Conditions~~
~~The five standard conditions of probation generally appearing in every case are as follows:~~
A probationary term is generally issued for a period between three (3) and five (5) years, dependent upon whether any aggravating or mitigating factors exist. Standard conditions are imposed on each and every probationer regardless of cause for discipline. For applicants, Condition 8, Cost Recovery, does not apply.

1. Obey all laws ~~[26]~~
2. Submit Quarterly Reports
~~3. Tolling of probation if respondent moves out-of-state [28]~~
~~2.~~3. Cooperate With Probation ~~surveillance [27]~~ Monitoring Program
4. Probation Monitoring Costs
5. Function as an Optometrist
6. Notice to Employer
7. Changes of Employment or Residence
8. Cost Recovery
~~15.~~ 9. Take and Pass California Laws and Regulations ~~Re Licensure~~ Examination~~(s)~~
~~13.~~10. Community Service ~~– Free Services~~
11. Valid License Status
~~28.~~12. Tolling ~~of probation if respondent moves out of state~~ for Out-Of-State Residence or Practice
13. License Surrender
~~5~~14. Violation of Probation
~~4.~~ 15. Completion of Probation ~~[30]~~
16. Sale or Closure of an Office and/or Practice

SEVERABILITY CLAUSE

Each condition of probation contained herein is a separate and distinct condition. If any condition of this Order, or any application thereof, is declared unenforceable in whole, in part, or to any extent, the remainder of this Order and all other applicants thereof, shall not be affected. Each condition of this Order shall separately be valid and enforceable to the fullest extent permitted by law.

~~26.~~ 1. OBEY ALL LAWS

Respondent shall obey all federal, state, and local laws, governing the practice of optometry in California.

Respondent shall notify the Board in writing within 72 hours of any incident resulting in his/her arrest, or charges filed against, or a citation issued against Respondent.

CRIMINAL COURT ORDERS: If Respondent is under criminal court orders by any governmental agency, including probation or parole, and the orders are violated, this shall be deemed a violation of probation and may result in the filing of an accusation or petition to revoke probation or both.

OTHER BOARD OR REGULATORY AGENCY ORDERS: If Respondent is subject to any other disciplinary order from any other health-care related board or any professional licensing or certification regulatory agency in California or elsewhere, and violates any of the orders or conditions imposed by other agencies, this shall be deemed a violation of probation and may result in the filing of an accusation or petition to revoke probation or both.

2. QUARTERLY REPORTS

Respondent shall file quarterly reports of compliance under penalty of perjury to the probation monitor assigned by the Board. Quarterly report forms will be provided by the Board (DG-QR1 (05/2012)). Omission or falsification in any manner of any information on these reports shall constitute a violation of probation and shall result in the filing of an accusation and/or a petition to revoke probation against Respondent's optometrist license. Respondent is responsible for contacting the Board to obtain additional forms if needed. Quarterly reports are due for each year of probation throughout the entire length of probation as follows:

- For the period covering January 1st through March 31st, reports are to be completed and submitted between April 1st and April 7th.
- For the period covering April 1st through June 30th, reports are to be completed and submitted between July 1st and July 7th.
- For the period covering July 1st through September 30th, reports are to be completed and submitted between October 1st and October 7th.
- For the period covering October 1st through December 31st, reports are to be completed and submitted between January 1st and January 7th.

Failure to submit complete and timely reports shall constitute a violation of probation.

~~27.~~ **3. COOPERATE WITH PROBATION** ~~surveillance~~ **MONITORING PROGRAM**

Respondent shall comply with ~~the board's probation surveillance program, including but not limited to allowing access to the probationer's optometric practice(s) and patient records upon request of the board or its agent.~~ the requirements of the Board's probation monitoring program, and shall, upon reasonable request, report or personally appear as directed.

Respondent shall claim all certified mail issued by the Board, respond to all notices of reasonable requests timely, and submit Reports, Identification Update reports or other reports similar in nature, as requested and directed by the Board or its representative.

Respondent is encouraged to contact the Board's probation monitoring program representative at any time he/she has a question or concern regarding his/her terms and conditions of probation.

Failure to appear for any scheduled meeting or examination, or cooperate with the requirements of the program, including timely submission of requested information, shall constitute a violation of probation and may result in the filing of an accusation and/or a petition to revoke probation against Respondent's Optometrist license.

4. PROBATION MONITORING COSTS

All costs incurred for probation monitoring during the entire probation shall be paid by the Respondent. The monthly cost may be adjusted as expenses are reduced or increased. Respondent's failure to comply with all terms and conditions may also cause this amount to be increased. The fee for probation monitoring shall start at a minimum of $100 per month.

All payments for costs are to be sent directly to the Board of Optometry and must be received by the date(s) specified. (Periods of tolling will not toll the probation monitoring costs incurred.)

If Respondent is unable to submit costs for any month, he/she shall be required, instead, to submit an explanation of why he/she is unable to submit the costs, and the date(s) he/she will be able to submit the costs, including payment amount(s). Supporting documentation and evidence of why the Respondent is unable to make such payment(s) must accompany this submission.

Respondent understands that failure to submit costs timely is a violation of probation and submission of evidence demonstrating financial hardship does not preclude the Board from pursuing further disciplinary action. However, Respondent understands that by providing evidence and supporting documentation of financial hardship it may delay further disciplinary action.

In addition to any other disciplinary action taken by the Board, an unrestricted license will not be issued at the end of the probationary period and the optometrist license will not be renewed, until such time as all probation monitoring costs have been paid. ~~The filing of bankruptcy by the Respondent shall not relieve the Respondent of his/her responsibility to reimburse the Board for costs incurred.~~

5. FUNCTION AS AN OPTOMETRIST

Respondent shall function as an optometrist for a minimum of 60 hours per month for the entire term of his/her probation period.

6. NOTICE TO EMPLOYER

Respondent shall provide to the Board the names, physical addresses, mailing addresses, and telephone number of all employers and supervisors and shall give specific, written consent that the licensee authorizes the Board and the employers and supervisors to communicate regarding the licensee's work status, performance, and monitoring. Monitoring includes, but is not limited to, any violation of any probationary term and condition.

Respondent shall be required to inform his/her employer, and each subsequent employer during the probation period, of the discipline imposed by this decision by providing his/her supervisor and director and all subsequent supervisors and directors with a copy of the decision and order, and the accusation in this matter prior to the beginning of or returning to employment or within 14 calendar days from each change in a supervisor or director.

The Respondent must ensure that the Board receives written confirmation from the employer that he/she is aware of the Discipline, on forms to be provided to the Respondent. The Respondent must ensure that all reports completed by the employer are submitted from the employer directly to the Board. Respondent is responsible for contacting the Board to obtain additional forms if needed.

7. CHANGES OF EMPLOYMENT OR RESIDENCE

Respondent shall notify the Board, and appointed probation monitor in writing, of any and all changes of employment, location, and address within 14 calendar days of such change. This includes but is not limited to applying for employment, termination or resignation from

employment, change in employment status, and change in supervisors, administrators or directors.

Respondent shall also notify his/her probation monitor AND the Board IN WRITING of any changes of residence or mailing address within 14 calendar days. P.O. Boxes are accepted for mailing purposes; however the Respondent must also provide his/her physical residence address as well.

8. COST RECOVERY

Respondent shall pay to the Board a sum not to exceed the costs of the investigation and prosecution of this case. That sum shall be $ _____ and shall be paid in full directly to the Board, in a Board approved payment plan, within 6 months from the end of the Probation term. Cost recovery will not be tolled.

If Respondent is unable to submit costs timely, he/she shall be required instead to submit an explanation of why he/she is unable to submit these costs in part or in entirety, and the date(s) he/she will be able to submit the costs, including payment amount(s). Supporting documentation and evidence of why the Respondent is unable to make such payment(s) must accompany this submission.

Respondent understands that failure to submit costs timely is a violation of probation and submission of evidence demonstrating financial hardship does not preclude the Board from pursuing further disciplinary action. However, Respondent understands that by providing evidence and supporting documentation of financial hardship may delay further disciplinary action.

Consideration to financial hardship will not be given should Respondent violate this term and condition, unless an unexpected AND unavoidable hardship is established from the date of this order to the date payment(s) is due. ~~The filing of bankruptcy by the Respondent shall not relieve the Respondent of his/her responsibility to reimburse the Board for these costs.~~

~~15.~~ 9. TAKE AND PASS CALIFORNIA LAWS AND REGULATIONS ~~Re~~ EXAMINATION

Within 60 calendar days of the effective date of this decision, or within some other time as prescribed in writing by the Board, ~~r~~Respondent shall take and pass ~~an oral or written exam, in a subject to be designated and administered by the Board or its designee~~ the California Laws and Regulations Examination (CLRE). If ~~r~~Respondent fails this examination, ~~r~~Respondent must take and pass a re-examination as approved by the Board. The waiting period between repeat examinations shall be at six-month intervals until success is achieved. ~~The~~ ~~r~~Respondent shall pay the established ~~cost of any such~~ examination fees.

~~(Continue with either one of these two options.)~~

~~(OPTION #1: Condition Subsequent)~~

~~If respondent fails the first examination, respondent shall cease the practice of optometry until the re-examination has been successfully passed; as evidenced by written notice to respondent from the Board. Failure to pass the required examination no later than 100 days prior to the termination date of probation shall constitute a violation of probation.~~

~~(OPTION #2: Condition Precedent)~~

~~Respondent shall not practice optometry until respondent has passed the required examination and has been so notified by the Board in writing. Failure to pass the required examination no later than 100 days prior to the termination date of probation shall constitute a violation of probation.~~

~~NOTE: The condition precedent option is particularly recommended in cases where respondent has been found to be grossly negligent or inefficient.~~

If Respondent has not taken and passed the examination within twelve months from the effective date of this decision, Respondent shall be considered to be in violation of probation.

~~Respondent shall not practice optometry until Respondent has passed the required examination and has been so notified by the Board in writing.~~
(Continue with either one of these two options.)

(OPTION #1: Condition Subsequent)
If Respondent fails the first examination, Respondent shall immediately cease the practice of optometry until the re-examination has been successfully passed; as evidenced by written notice to Respondent from the Board.

(OPTION #2: Condition Precedent)
Respondent shall not practice optometry until Respondent has passed the required examination and has been so notified by the Board in writing.

NOTE: The condition precedent option is particularly recommended in cases where Respondent has been found to be grossly negligent or inefficient.

~~13.~~ 10. COMMUNITY SERVICES~~- Free Services~~
All types of community services shall be at the Board's discretion, depending on the violation. Within ~~60~~ 30 calendar days of the effective date of this decision, ~~r~~Respondent shall submit to the ~~b~~Board, for its prior approval, a community service program in which ~~r~~Respondent ~~shall~~ provides free non-optometric or professional optometric services on a regular basis to a community or charitable facility or agency, ~~for at least~~ amounting to a minimum of _____(Ex: 20) hours ~~a~~ per month ~~for the first (Ex: 24) months of probation.~~ of probation. ~~Type of community service shall be at the Board's discretion depending on the violation.~~ Such services shall begin no later than 15 calendar days after Respondent is notified of the approved program.

11. VALID LICENSE STATUS
Respondent shall maintain a current, active and valid license for the length of the probation period. Failure to pay all fees and meet CE requirements prior to his/her license expiration date shall constitute a violation of probation.

~~28.~~12. TOLLING ~~of probation if respondent moves out-of-state~~ FOR OUT-OF-STATE RESIDENCE OR PRACTICE
~~The period of probation shall not run during the time respondent is residing or practicing outside the jurisdiction of California. If, during probation, respondent moves out of the jurisdiction of California to reside or practice elsewhere, respondent is required to immediately notify the Board in writing of the date of departure, and the date of return, if any.~~
Periods of residency or practice outside California, whether the periods of residency or practice are temporary or permanent, will toll the probation period but will not toll the cost recovery requirement, nor the probation monitoring costs incurred. Travel outside of California for more than 30 calendar days must be reported to the Board in writing prior to departure. Respondent shall notify the Board, in writing, within 14 calendar days, upon his/her return to California and prior to the commencement of any employment where representation as an optometrist is/was provided.

Respondent's license shall be automatically cancelled if Respondent's periods of temporary or permanent residence or practice outside California total two years. However, Respondent's license shall not be cancelled as long as Respondent is residing and practicing in another state of the United States and is on active probation with the licensing authority of that state, in which case the two year period shall begin on the date probation is completed or terminated in that state.

13. LICENSE SURRENDER

During Respondent's term of probation, if he/she ceases practicing due to retirement, health reasons, or is otherwise unable to satisfy any condition of probation, Respondent may surrender his/her license to the Board. The Board reserves the right to evaluate Respondent's request and exercise its discretion whether to grant the request, or to take any other action deemed appropriate and reasonable under the circumstances, without further hearing. Upon formal acceptance of the tendered license and wall certificate, Respondent will no longer be subject to the conditions of probation. All costs incurred (i.e., Cost Recovery and Probation Monitoring) are due upon reinstatement.

Surrender of Respondent's license shall be considered a Disciplinary Action and shall become a part of Respondent's license history with the Board.

30. 14. VIOLATION OF PROBATION

If rRespondent violates any term of the probation in any respect, the Board, after giving rRespondent notice and the opportunity to be heard, may revoke probation and carry out the disciplinary order that was stayed. If an accusation or a petition to revoke probation is filed against rRespondent during probation, the Board shall have continuing jurisdiction until the matter is final, and the period of probation shall be extended until the matter is final. No petition for modification of discipline shall be considered while there is an accusation or petition to revoke probation or other discipline pending against Respondent.

29 15. COMPLETION OF PROBATION

Upon successful completion of probation, Respondent's certificate license shall be fully restored.

16. SALE OR CLOSURE OF AN OFFICE AND/OR PRACTICE

If Respondent sells or closes his or her office after the imposition of administrative discipline, Respondent shall ensure the continuity of patient care and the transfer of patient records. Respondent shall also ensure that patients are refunded money for work/services not completed or provided, and shall not misrepresent to anyone the reason for the sale or closure of the office and/or practice. The provisions of this condition in no way authorize the practice of optometry by the Respondent during any period of license suspension.

STANDARD ALCOHOL/DRUG CONDITIONS

The following standards are in addition to standards 1-16 and apply to every licensee who is on probation for substance abuse, pursuant to SB 1441 Uniform Standards.

8.17. Drugs & Abstain Abstention From Use of Controlled Substances/Alcohol
9. Drugs - Exception for Personal Illness
11. Alcohol -Abstain From Use
12.18. Biological Fluid Testing

8.17. Drugs & Abstain ABSTENTION FROM USE OF CONTROLLED SUBSTANCES/ALCOHOL

Respondent shall abstain completely from the personal use or possession of controlled substances as defined in the California Uniform Controlled Substances Act, and dangerous drugs as defined by Section 4211 of the Business and Professions Code or any drugs requiring a prescription.

NOTE: Also use Condition No.9 which exempts "use or possession" for personal illness.

alcohol, any and all other mood altering drugs, substances and their associated paraphernalia.; except when the drugs are lawfully prescribed by a licensed practitioner as part of a documented medical treatment. Respondent shall identify for the Board, a single physician, nurse practitioner or physician assistant who shall be aware of Respondent's history of substance abuse and will coordinate and monitor any prescriptions for Respondent for dangerous drugs, controlled substances, or mood altering drugs. The coordinating physician, nurse practitioner, or physician assistant shall report to the Board on a quarterly basis. Quarterly reports are due for each year of probation throughout the entire length of probation as follows:

- For the period covering January 1st through March 31st, reports are to be completed and submitted between April 1st and April 7th.
- For the period covering April 1st through June 30th, reports are to be completed and submitted between July 1st and July 7th.
- For the period covering July 1st through September 30th, reports are to be completed and submitted between October 1st and October 7th.
- For the period covering October 1st through December 31st, reports are to be completed and submitted between January 1st and January 7th.

The quarterly report shall include, but not be limited to:

1. the Respondent's name;
2. license number;
3. physician, nurse practitioner, or physician assistant's name and signature;
4. physician, nurse practitioner, or physician assistant's license number;
5. dates Respondent had face-to-face contact or correspondence (written and verbal) with physician, nurse practitioner, or physician assistant;
6. the Respondent's compliance with this condition;
7. if any substances have been prescribed, identification of a program for the time-limited use of any substances;
8. any change in behavior and/or personal habits;
9. assessment of the Respondent's ability to practice safely;
10. recommendation dependant on Respondent's progress and compliance with this condition on whether to continue with current prescription plan and/or treatment, modify plan and/or treatment, or require Respondent to cease practice;
11. other relevant information deemed necessary by the physician, nurse practitioner, physician, or the Board.

Respondent is ultimately responsible for ensuring his/her physician, nurse practitioner or physician assistant submits complete and timely reports. Failure to ensure each submission of complete and timely reports shall constitute a violation of probation.

The Board may require a single coordinating physician, nurse practitioner, or physician assistant to be a specialist in addictive medicine, or to consult with a specialist in addictive medicine.

Respondent shall execute a release authorizing the release of pharmacy and prescribing records as well as physical and mental health medical records. Respondent shall also provide information of treating physicians, counselors or any other treating professional as requested by the Board.

Respondent shall ensure that he/she is not in the presence of or in the same physical location as individuals who are using illegal substances, even if Respondent is not personally ingesting the drug(s). Any positive result that registers over the established laboratory cut off level shall constitute a violation of probation and shall result in the filing of an accusation and/or a petition to revoke probation against Respondent's optometric license.

Respondent also understands and agrees that any positive result that registers over the established laboratory cut off level shall be reported to each of Respondent's employers.

~~9. Drugs - Exception for Personal Illness~~
~~Orders forbidding respondent from personal use or possession of controlled substances or dangerous drugs do not apply to medications lawfully prescribed to respondent for a bona fide illness or condition by a licensed physician.~~
~~NOTE: Add this exception whenever Condition 8 is used.~~

~~11. Alcohol -Abstain From Use~~
~~Respondent shall abstain completely from the use of alcoholic beverages.~~

~~12.~~**18. BIOLOGICAL FLUID TESTING**
Respondent, at his/her expense, shall ~~immediately submit to biological fluid testing, at Respondent's cost, upon the request of the Board or its designee.~~ participate in random testing, including but not limited to biological fluid testing (i.e. urine, blood, saliva), breathalyzer, hair follicle testing, or any drug screening program approved by the Board. The length of time shall be for the entire probation period. The Respondent will be randomly drug tested at the frequency outlined in Uniform Standards for Substance Abuse #4 ~~(see page 7)~~.

Respondent shall make daily contact to determine if he/she is required to submit a specimen for testing, including weekends and holidays, at a lab approved by the Board. Board representatives may also appear unannounced, at any time to collect a specimen. All collections will be observed.

At all times Respondent shall fully cooperate with the Board or any of its representatives, and shall, when directed, appear for testing as requested and submit to such tests and samples for the detection of alcohol, narcotics, hypnotic, dangerous drugs or other controlled substances. All alternative testing sites, due to vacation or travel outside of California, must be approved by the Board prior to the vacation or travel.

If Respondent is unable to provide a specimen in a reasonable amount of time from the request, Respondent understands that, while at the work site, any Board representative may request from the supervisor, manager or director on duty to observe Respondent in a manner that does not interrupt or jeopardize patient care in any manner until such time Respondent provides a specimen acceptable to the Board.

If Respondent tests positive for a prohibited substance per his/her probationary order, Respondent's license shall be automatically suspended. The Board will contact the Respondent and his/her employers, supervisors, managers, work site monitors, and contractors and notify them that Respondent's license has been suspended as a result of a positive test. Thereafter, the Board may contact the specimen collector, laboratory, Respondent, treating physician, treatment provider and support group facilitators to determine whether the positive test is in fact evidence of prohibited use. If the Board determines the positive test is not evidence of prohibited use, the Board shall immediately reinstate the license and inform the Respondent and others previously contacted, that the license is no longer suspended.

Failure to submit to testing on the day requested, or appear as requested by any Board representative for testing, as directed, shall constitute a violation of probation and shall result in the filing of an accusation and/or a petition to revoke probation against Respondent's optometrist license.

OPTIONAL CONDITIONS

The conditions imposed are dependent upon the violation(s) committed.

19. Participate in Group Support Meeting
20. Notice to Patients
21. Alcohol and Drug Treatment
~~12.~~22. Worksite Monitor
23. Direct Supervision
~~14.~~24. Remedial Education ~~Course~~
~~7.~~25. ~~Actual~~ Suspension
26. Employment Limitations
~~17.~~27. Psychotherapy or Counseling Program
~~16.~~28. ~~Psychiatric or Psychological~~ Mental Health Evaluation
~~18.~~29. Medical Health Evaluation
~~19.~~30. Medical Treatment
31. Restitution
32. Audit Required
~~10.~~33. Lens Prescriptions – Maintain Records
~~21. Third Party Presence. Sexual Transgressions~~
~~22.~~34. Restricted Practice ~~- Incompetence~~
~~24.~~35. Restrictions as to Branch Offices
~~25.~~ 36. Restrictions as to Advertisement
37. Take and Pass NBEO Exams
38. Continuing Education
39. Medical Record Keeping Course

19. PARTICIPATE IN GROUP SUPPORT MEETING

Respondent shall attend at least one (1), 12-step recovery meeting or equivalent during each week of probation, as approved or directed by the Board. Respondent shall submit dated and signed documentation confirming such attendance to the Board during the entire period of probation

20. NOTICE TO PATIENTS

During the period of probation, Respondent shall post a notice in a prominent place in his/her office that is conspicuous and readable to the public. The notice shall state the Respondent's Optometric license is on probation and shall contain the telephone number of the State Board of Optometry. Respondent shall also post a notice containing this information prominently on any website related to his/her practice of Optometry. The notice described above shall be approved by the Board within 30 calendar days of the effective date of this decision.

~~23. Drug, Alcohol, or Other Chemical Abuse Counseling and Treatment~~

~~Within 15 days of the effective date of this decision, respondent shall submit the name, business address and business telephone number of three persons who are professionally qualified to provide counseling and treatment for drug, alcohol or other chemical abuse appropriate to the case. Thereafter the Board through its staff shall select one of these persons to provide the necessary counseling and treatment. Within 30 days of written notification of this selection to the respondent the respondent shall, in consultation with this counselor and treating professional, prepare and submit to the Board for its approval, a counseling and treatment program all costs of which shall be paid by the respondent. Respondent shall successfully complete this counseling and treatment program as a condition of probation.~~

21. ALCOHOL AND DRUG TREATMENT

Respondent, at his/her expense, shall successfully complete a treatment regime at a recognized and established program in California of at least six months duration and approved by the Board. The treatment program shall be successfully completed within the first nine months of probation. The program director, psychiatrist, or psychologist shall confirm that Respondent has complied with the requirement of this decision and shall notify the Board immediately if he/she believes the Respondent cannot safely practice. Respondent shall sign a release allowing the program to release to the Board all information the Board deems relevant.

Respondent shall inform the program director, psychiatrist or psychologist, of his/her probationary status with the Board, and shall cause that individual to submit monthly reports to the Board providing information concerning Respondent's progress and prognosis. Such reports shall include results of biological fluid testing.

Positive results shall be reported immediately to the Board and may be used in administrative discipline.

~~20.~~ 22. WORKSITE MONITOR~~ING~~

Within 30 calendar days of the effective date of this decision, ~~r~~Respondent shall submit to the Board or its designee for ~~its~~ prior approval as a worksite monitor, the name and qualifications of an optometrist or board certified ophthalmologist, and a plan of practice in which ~~r~~Respondent's practice shall be monitored by the approved worksite monitor. ~~another optometrist who shall provide periodic reports to the Board.~~ The worksite monitor's license scope of practice shall include the scope of practice of the Respondent that is being monitored. The worksite monitor shall have an active unrestricted license, with no disciplinary action within the last five (5) years. The worksite monitor shall not have any financial, personal, or familial relationship with the Respondent, or other relationship that could reasonably be expected to compromise the ability of the monitor to render impartial and unbiased reports to the Board. If it is impractical for anyone but the licensee's employer to serve as the worksite monitor, this requirement may be waived by the Board; however, under no circumstances shall a licensee's worksite monitor be an employee of the licensee. Any cost for such monitoring shall be paid by ~~r~~Respondent.

~~If the monitor resigns or is no longer available, rRespondent shall, within 15 days, move to have a new monitor appointed, through nomination by rRespondent and approval by the Board.~~

~~The worksite monitor's license scope of practice shall include the scope of practice of the Respondent that is being monitored or be another health care professional if no monitor with like practice is available. The worksite monitor shall have an active unrestricted license, with no disciplinary action within the last five (5) years.~~

The Board or its designee shall provide the approved worksite monitor with copies of the decision(s) and accusation(s), and a proposed monitoring plan. Within 15 calendar days of receipt of the decision(s), accusation(s), and proposed monitoring plan, ~~T~~the worksite monitor shall sign an affirmation that he or she has reviewed the terms and conditions of the licensee's disciplinary order, fully understands the role of worksite monitor, and agrees or disagrees with the proposed monitoring plan ~~to monitor the licensee as~~ set forth by the Board. If the worksite monitor disagrees with the proposed monitoring plan, the worksite monitor shall submit a revised worksite monitoring plan with the signed affirmation for approval by the Board or its designee.

Within 60 calendar days of the effective date of this decision, and continuing throughout probation, Respondent's practice shall be monitored by the approved worksite monitor. Respondent shall make all records available for immediate inspection and copying on the premises by the worksite monitor at all times during business hours and shall retain the records for the entire term of probation.

If Respondent fails to obtain approval of a monitor within 60 calendar days of the effective date of this decision, Respondent shall receive a notification from the Board or its designees to cease the practice of optometry within three (3) calendar days after being so notified. Respondent shall cease practice until a worksite monitor is approved to provide worksite monitoring responsibility.

The worksite monitor must adhere at a minimum, to the following required methods of monitoring the licenseeRespondent:

a) Have face-to-face contact with the licenseeRespondent in the work environment on a frequent basis as determined by the Board, at least once per week.
b) Interview other staff in the office regarding the licensee's Respondent's behavior, if applicable.
c) Review the licensee's Respondent's work attendance.

Any suspected substance abuse must be verbally reported to the Board and the licensee's employer within one (1) business day of occurrence. If occurrence is not during the Board's normal business hours the verbal report must be within one (1) hour of the next business day. A written report shall be submitted to the Board within 48 hours of occurrence.

The worksite monitor shall complete and submit a written report monthly or as directed by the Board. The report shall include:

1. the licensee's name;
2. license number;
3. worksite monitor's name and signature;
4. worksite monitor's license number;
5. worksite location(s);
6. dates licensee had face-to-face contact with monitor;
7. staff interviewed, if applicable;
8. attendance report;
9. any change in behavior and/or personal habits;
10. any indicators that can lead to suspected substance abuse.

The licensee Respondent shall complete the required consent forms and sign an agreement with the worksite monitor and the Board to allow the Board to communicate with the worksite monitor.

(OPTIONAL)
Respondent is prohibited from engaging in solo practice.

The worksite monitor must submit Qquarterly Rreports of documenting the Respondent's work Pperformance. Reports are due for each year of probation and the entire length of probation from the worksite monitor as follows:

- For the period covering January 1st through March 31st, reports are to be completed and submitted between April 1st and April 7th.
- For the period covering April 1st through June 30th, reports are to be completed and submitted between July 1st and July 7th.
- For the period covering July 1st through September 30th, reports are to be completed and submitted between October 1st and October 7th.
- For the period covering October 1st through December 31st, reports are to be completed and submitted between January 1st and January 7th.

The quarterly report shall include, but not be limited to:

1. the Respondent's name;
2. license number;
3. worksite monitor's name and signature;
4. worksite monitor's license number;
5. worksite location(s);
6. dates Respondent had face-to-face contact or correspondence (written and verbal) with monitor;
7. staff interviewed, if applicable;
8. attendance report;
9. any change in behavior and/or personal habits;
10. assessment of the Respondent's ability to practice safely;
11. recommendation dependant on Respondent's performance on whether to continue with current worksite monitor plan, modify plan, or require Respondent to cease practice;
12. other relevant information deemed necessary by the worksite monitor or the Board.

Respondent is ultimately responsible for ensuring his/her worksite monitor submits complete and timely reports. Failure to ensure his/her worksite monitor submits complete and timely reports shall constitute a violation of probation.

If the monitor resigns or is no longer available, Respondent shall, within five (5) calendar days of such resignation or unavailability, submit in writing to the Board or its designee, for prior approval, the name and qualifications of a replacement worksite monitor who will be assuming that responsibility within 15 calendar days. If Respondent fails to obtain approval of a replacement monitor within 60 calendar days of the resignation or unavailability of the monitor, Respondent shall receive a notification from the Board or its designee to cease the practice of optometry within three (3) calendar days. After being so notified, Respondent shall cease practice until a replacement monitor is approved and assumes monitoring responsibility.

23. DIRECT SUPERVISION

During the period of probation, Respondent shall be under the direct supervision of a person holding a current and valid un-restricted Board-issued license. "Direct supervision" means assigned to an optometrist who is on duty and immediately available in the assigned patient area. The Board shall be informed in writing of and approve the level of supervision provided to the Respondent while he/she is functioning as a licensed optometrist. The appropriate level of supervision must be approved by the Board prior to engaging in practice.

Supervisor Quarterly Reports of Performance are due for each year of probation and the entire length of probation from each employer, as follows:

- For the period covering January 1st through March 31st, reports are to be completed and submitted between April 1st and April 7th.
- For the period covering April 1st through June 30th, reports are to be completed and submitted between July 1st and July 7th.
- For the period covering July 1st through September 30th, reports are to be completed and submitted between October 1st and October 7th.
- For the period covering October 1st through December 31st, reports are to be completed and submitted between January 1st and January 7th.

The quarterly report shall include, but not be limited to:

1. the Respondent's name;
2. license number;
3. direct supervisor's name and signature;
4. direct supervisor's license number;
5. worksite location(s);
6. dates Respondent had face-to-face contact or correspondence (written and verbal) with direct supervisor;
7. staff interviewed, if applicable;
8. attendance report;
9. any change in behavior and/or personal habits;
10. assessment of the Respondent's ability to practice safely;
11. recommendation dependant on Respondent's performance on whether to continue with current direct supervisor plan, modify plan, or require Respondent to cease practice;
12. other relevant information deemed necessary by the direct supervisor or the Board.

Respondent is ultimately responsible for ensuring his/her supervisor submits complete and timely reports. Failure to ensure each supervisor submits complete and timely reports shall constitute a violation of probation.

~~14.~~ 24. REMEDIAL EDUCATION ~~Course~~

~~Within 90 days of the effective date of this decision, and on an annual basis thereafter, respondent shall submit to the Board for its prior approval an educational program or course to be designated by the Board, which shall not be less than 40 hours per year, for each year of probation. This program shall be in addition to the Continuing Optometric Education requirements for re-licensure, and shall be obtained with all costs being paid by respondent. Following the completion of each course, the Board or its designee may administer an examination to test respondent's knowledge of the course. Respondent shall provide written proof of attendance in such course or courses as are approved by the Board.~~

Respondent shall take and successfully complete the equivalency of (Ex: 16) semester units in each of the following areas **pertaining to the practice of Optometry**: (Ex: eye disease, when to refer, contact lenses). All course work shall be taken at the graduate level at an accredited or approved educational institution that offers a qualifying degree for licensure as an optometrist, or through a course approved by the Board. Classroom attendance must be specifically required. Course content shall be pertinent to the violation and all course work must be completed within one year from the effective date of this decision. Successful completion is a grade of "C" or "70%" or better for any completed course.

Within 90 calendar days of the effective date of the decision Respondent shall submit a plan for prior Board approval for meeting these educational requirements. All costs of the course work shall be paid by the Respondent. Units obtained for an approved course shall not be used for continuing education units required for renewal of licensure.

~~7.~~ 25. ~~Actual~~ SUSPENSION

As part of probation, ~~r~~Respondent ~~is~~ shall be suspended from the practice of optometry for a period of _____ (Ex: 90 calendar days) beginning the effective date of this decision. If not employed as an optometrist or if currently on any other type of leave from employment, the suspension shall be served once employment has been established or reestablished and prior to the end of the probationary period. Respondent shall ensure that each employer informs the Board, in writing, that it is aware of the dates of suspension.

26. EMPLOYMENT LIMITATIONS

Respondent shall not work in any health care setting as a supervisor of optometrists. The Board may additionally restrict Respondent from supervising technicians and/or unlicensed assistive personnel on a case-by-case basis.

Respondent shall not work as a faculty member in an approved school of optometry or as an instructor in a Board approved continuing education program.

Respondent shall work only in a regularly assigned, identified and predetermined worksite(s) and shall not work in a "float" capacity.

~~17.~~ 27. PSYCHOTHERAPY OR COUNSELING PROGRAM

Within ~~60~~ 30 calendar days of the effective date of this decision, ~~r~~Respondent shall submit to the Board for its prior approval the name and qualifications of a psychotherapist .or counselor of ~~r~~Respondent's choice. Upon approval, ~~r~~Respondent shall undergo and continue treatment, at ~~r~~Respondent 's cost, until ~~the Board deems that no further psychotherapy is necessary.~~ such time as the Board releases him/her from this requirement and only upon the recommendation of the treating psychotherapist or counselor. ~~Respondent shall have the treating psychotherapist submit quarterly status reports to the Board.~~

The treating psychotherapist or counselor must submit quarterly reports. Reports are due each year of probation and the entire length of probation from the treating psychotherapist or counselor as follows:

- For the period covering January 1st through March 31st, reports are to be completed and submitted between April 1st and April 7th.
- For the period covering April 1st through June 30th, reports are to be completed and submitted between July 1st and July 7th.
- For the period covering July 1st through September 30th, reports are to be completed and submitted between October 1st and October 7th.
- For the period covering October 1st through December 31st, reports are to be completed and submitted between January 1st and January 7th.

The quarterly report shall include, but not be limited to:

1. the Respondent's name;
2. license number;
3. psychotherapist or counselor's name and signature;
4. psychotherapist or counselor's license number;
5. dates Respondent had face-to-face contact or correspondence (written and verbal) with psychotherapist or counselor;
6. the Respondent's compliance with this condition;
7. the Respondent's diagnosis, prognosis, and progress;
8. if any substances have been prescribed, identification of a program for the time-limited use of any substances;
9. any change in behavior and/or personal habits;
10. assessment of the Respondent's ability to practice safely;
11. recommendation dependant on Respondent's progress and compliance with this condition on whether to continue with current treatment plan, modify plan treatment plan, or require Respondent to cease practice;
12. other relevant information deemed necessary by the psychotherapist, counselor or the Board.

Respondent is ultimately responsible for ensuring his/her treating psychotherapist or counselor submits complete and timely reports. Failure to ensure each submission of complete and timely reports shall constitute a violation of probation.

The Board may require ~~r~~Respondent to undergo psychiatric or psychological evaluations by a Board-~~appointed~~ approved psychiatrist or psychologist.

NOTE: This condition is for those cases where the evidence demonstrates that the ~~r~~Respondent has had impairment (~~impairment by~~ mental illness, alcohol abuse and drug abuse) related to the violations but is not at present a danger to patients.

~~16~~28. ~~Psychiatric or Psychological~~ MENTAL HEALTH EVALUATION

Respondent shall, within 30 calendar days of the effective date of this decision, and on a periodic basis thereafter as may be required by the Board or its designee, to submit to ~~respondent shall undergo a psychiatric or psychological evaluation (and psychological testing, if deemed necessary) by a Board-appointed psychiatrist or psychologist, at respondent's cost, who shall furnish a psychiatric or psychological report to the Board or its designee.~~

~~If respondent is required by the Board or its designee to undergo psychiatric or psychological treatment, respondent shall within 30 days of the requirement notice submit to the Board for its prior approval the name and qualifications of a psychiatrist or psychologist of respondent's choice. Upon approval of the treating psychiatrist or psychologist, respondent shall undergo and continue psychiatric or psychological treatment, at respondent's cost, until further notice from the Board. Respondent shall have the treating psychiatrist or psychologist submit quarterly status reports to the Board.~~

~~(OPTIONAL) Respondent shall not engage in the practice of optometry until notified by the Board of its determination that respondent is mentally fit to practice safely. NOTE: This condition is for those cases where the evidence demonstrates that mental illness or disability was a contributing cause of the violations.~~a mental health ~~examination~~ evaluation, including psychological testing as appropriate, to determine his/her capability to perform the duties of an optometrist. The ~~examination~~ evaluation will be performed by a psychiatrist, psychologist or other licensed mental health practitioner approved by the Board. ~~and will be at Respondent's cost.~~ An immediate suspension may be imposed by the Board until further notification if the results from the mental health evaluation prove the Respondent is unsafe to practice.

If Respondent fails to have the above ~~assessment~~ evaluation submitted to the Board within the 30 calendar day requirement, Respondent shall immediately cease practice and shall not resume practice until notified by the Board. This period of suspension will not apply to the reduction of this probationary time period. The Board may waive or postpone this suspension only if significant, documented evidence of mitigation is provided. Such evidence must establish good faith efforts by Respondent to obtain the ~~assessment~~ evaluation, and a specific date for compliance must be provided. Only one such waiver or extension may be permitted.

Following the evaluation, Respondent shall comply with all restrictions or conditions recommended by the evaluator within 15 calendar days after being notified by the Board or its designee. If Respondent is required by the Board or its designee to undergo treatment, Respondent shall, within 30 calendar days of the requirement notice, submit to the Board or its designee for prior approval the name and qualifications of a licensed psychiatrist, psychologist or other licensed mental health practitioner of Respondent's choice. Upon approval of the treating psychiatrist, psychologist or other licensed health practitioner, Respondent shall within 15 calendar days undergo treatment and shall continue such treatment until further notice from the Board or its designee.

The treating psychiatrist psychologist or other licensed mental health practitioner shall consider the information provided by the Board or its designee or any other information the treating psychiatrist, psychologist or other mental health practitioner may deem pertinent prior to the

commencement of treatment. Respondent shall have the psychiatrist, psychologist or other health practitioner submit quarterly reports to the Board or its designee indicating whether or not the Respondent is capable of practicing optometry safely. The quarterly reports are due each year of probation and the entire length of probation from the psychiatrist, psychologist or other licensed mental health practitioner as follows:

- For the period covering January 1st through March 31st, reports are to be completed and submitted between April 1st and April 7th.
- For the period covering April 1st through June 30th, reports are to be completed and submitted between July 1st and July 7th.
- For the period covering July 1st through September 30th, reports are to be completed and submitted between October 1st and October 7th.
- For the period covering October 1st through December 31st, reports are to be completed and submitted between January 1st and January 7th.

The quarterly report shall include, but not be limited to:

1. the Respondent's name;
2. license number;
3. treating psychiatrist, psychologist or other licensed mental health practitioner's name and signature;
4. treating psychiatrist, psychologist or other licensed mental health practitioner's license number;
5. dates Respondent had face-to-face contact or correspondence (written and verbal) with treating psychiatrist, psychologist or other licensed mental health practitioner;
6. the Respondent's compliance with this condition;
7. the Respondent's diagnosis, prognosis, and progress;
8. if any substances have been prescribed, identification of a program for the time-limited use of any substances;
9. any change in behavior and/or personal habits;
10. assessment of the Respondent's ability to practice safely;
11. recommendation dependant on Respondent's evaluation, progress and compliance with this condition on whether to continue with current treatment plan, modify treatment plan, or require Respondent to cease practice;
12. other relevant information deemed necessary by the treating psychiatrist, psychologist, other licensed mental health practitioner, or the Board.

Respondent is ultimately responsible for ensuring his/her psychiatrist, psychologist or other licensed mental health practitioner submits complete and timely reports. Failure to ensure each submission of complete and timely reports shall constitute a violation of probation.

Respondent shall provide the Board or its designee with any and all medical records pertaining to treatment deemed necessary by the Board or its designee.

If, prior to the completion of probation, Respondent is found to be mentally incapable of resuming the practice of optometry without restrictions, the Board shall retain continuing jurisdiction of Respondent's license and the period of probation shall be extended until the Board determines that Respondent is mentally capable of resuming practice of optometry without restrictions. Respondents shall pay the cost of the evaluation(s) and treatment.

(OPTIONAL) Respondent shall not engage in the practice of optometry until notified by the Board of its determination that Respondent is mentally fit to practice safely.

NOTE: This condition is for those cases where the evidence demonstrates that mental illness or disability was a contributing cause of the violations.

~~18.~~29. MEDICAL HEALTH EVALUATION

Within 30 calendar days of the effective date of this decision, and on a periodic basis thereafter as may be required by the Board or its designee, ~~r~~Respondent shall undergo a medical evaluation, at ~~r~~Respondent 's cost, by a Board- appointed physician who shall furnish a medical report to the Board or its designee. Based on the medical evaluation, the Board may require Respondent to undergo medical treatment.

If ~~r~~Respondent is required by the Board or its designee to undergo medical treatment, ~~r~~Respondent shall within 30 calendar days of the requirement notice submit to the Board for its prior approval the name and qualification of a physician of ~~r~~Respondent's choice. Upon approval of the treating physician, ~~r~~Respondent shall undergo and continue medical treatment, at ~~r~~Respondent's cost, until further notice from the Board. Respondent shall have the treating physician submit quarterly reports to the Board. Quarterly reports are due each year of probation and the entire length of probation from the treating physician as follows:

- For the period covering January 1st through March 31st, reports are to be completed and submitted between April 1st and April 7th.
- For the period covering April 1st through June 30th, reports are to be completed and submitted between July 1st and July 7th.
- For the period covering July 1st through September 30th, reports are to be completed and submitted between October 1st and October 7th.
- For the period covering October 1st through December 31st, reports are to be completed and submitted between January 1st and January 7th.

The quarterly report shall include, but not be limited to:

1. the Respondent's name;
2. license number;
3. treating physician's name and signature;
4. treating physician's license number;
5. dates Respondent had face-to-face contact or correspondence (written and verbal) with treating physician;
6. the Respondent's compliance with this condition;
7. the Respondent's diagnosis, prognosis, and progress;
8. if any substances have been prescribed, identification of a program for the time-limited use of any substances;
9. any change in behavior and/or personal habits;
10. assessment of the Respondent's ability to practice safely;
11. recommendation dependant on Respondent's evaluation results, progress and compliance with this condition on whether to continue with current treatment plan, modify treatment plan, or require Respondent to cease practice;
12. other relevant information deemed necessary by the treating physician, or the Board.

Respondent is ultimately responsible for ensuring his/her physician submits complete and timely reports. Failure to ensure each submission of complete and timely reports shall constitute a violation of probation.

(OPTIONAL)

Respondent shall not engage in the practice of optometry until notified by the Board of its determination that ~~r~~Respondent is medically fit to practice safely.

NOTE: This condition is for those cases where the evidence demonstrates that medical illness or disability was a contributing cause of the violations.

~~19.~~ 30. MEDICAL TREATMENT

Within ~~60~~ 30 calendar days of the effective date of this decision, ~~r~~Respondent shall submit to the Board for its prior approval the name and qualifications of a physician of ~~r~~Respondent's choice. Upon approval, ~~r~~Respondent shall undergo and continue treatment, at Respondent's cost, until the Board deems that no further medical treatment is necessary. Respondent shall have the treating physician submit quarterly status reports to the Board. Quarterly status reports are due each year of probation and the entire length of probation from the treating physician as follows:

- For the period covering January 1st through March 31st, reports are to be completed and submitted between April 1st and April 7th.
- For the period covering April 1st through June 30th, reports are to be completed and submitted between July 1st and July 7th.
- For the period covering July 1st through September 30th, reports are to be completed and submitted between October 1st and October 7th.
- For the period covering October 1st through December 31st, reports are to be completed and submitted between January 1st and January 7th.

The quarterly report shall include, but not be limited to:

1. the Respondent's name;
2. license number;
3. treating physician's name and signature;
4. treating physician's license number;
5. dates Respondent had face-to-face contact or correspondence (written and verbal) with treating physician;
6. the Respondent's compliance with this condition;
7. the Respondent's diagnosis, prognosis, and progress;
8. if any substances have been prescribed, identification of a program for the time-limited use of any substances;
9. any change in behavior and/or personal habits;
10. assessment of the Respondent's ability to practice safely;
11. recommendation dependant on Respondent's progress and compliance with this condition on whether to continue with current treatment plan, modify treatment plan, or require Respondent to cease practice;
12. other relevant information deemed necessary by the treating physician, or the Board.

Respondent is ultimately responsible for ensuring his/her physician submits complete and timely reports. Failure to ensure each submission of complete and timely reports shall constitute a violation of probation.

The Board may require ~~r~~Respondent to undergo periodic medical evaluations by a Board-~~appointed~~ approved physician.

~~NOTE: This condition is for those cases where there is evidence that medical illness or disability was a contributing cause of the violations but the respondent is not at present a danger to his patients~~.

31. RESTITUTION

Within 90 calendar days of the effective date of this decision, Respondent shall provide ~~proof~~ to the Board or its designee proof of restitution in the amount of $_____ paid to_____.

32. AUDIT REQUIRED

The Board ~~may~~ shall require quarterly audits of patient visits, billings, and payments as a condition of probation.

Within ~~sixty (60)~~ 30 calendar days of the effective date of this decision, Respondent shall provide to the Board or its designee the names and qualifications of three third party auditors. The Board or its designee shall select one of the three auditors to audit Respondent's billings . During said audit, randomly selected client billing records shall be reviewed in accordance with accepted auditing/accounting standards and practices.

The Board or its designee shall provide the approved auditor with copies of the decision(s) and accusation(s), and a proposed auditing plan. Within 15 calendar days of receipt of the decision(s), accusation(s), and proposed monitoring plan, the auditor shall sign an affirmation that he or she has reviewed the terms and conditions of the Respondent's disciplinary order, fully understands the role of auditor, an agrees or disagrees with the proposed auditing plan set forth by the Board. If the auditor disagrees with the proposed auditing plan, the auditor shall submit a revised auditing plan with the signed affirmation for approval by the Board or its designee.

Within 60 calendar days of the effective date of this decision, and continuing throughout probation, Respondent's patient visits, billings and payments shall be audited by the approved auditor. Respondent shall make all records available for immediate inspection and copying on the premises by the auditor at all times during business hours and shall retain the records for the entire term of probation.

If Respondent fails to obtain approval of an auditor within 60 calendar days of the effective date of this decision, Respondent shall receive a notification from the Board or its designee to cease the practice of optometry within three (3) calendar days after being so notified. Respondent shall cease practice until an auditor is approved to provide auditing responsibility.

~~If requested by the Board, the~~ The Board shall be advised of the results of the audit, and may obtain any and all copies of any documents audited or the results of the audit~~, upon request~~. The cost of the audits shall be borne by Respondent. Failure to pay for the audits in a timely fashion ~~or failure to provide the Board with the audit results and/or copies of the audited records~~ within ten (10) calendar days from audit completion shall constitute a violation of probation.

Quarterly reports of the audit results are due each year of probation and the entire length of probation from the auditor as follows:

- For the period covering January 1st through March 31st, reports are to be completed and submitted between April 1st and April 7th.
- For the period covering April 1st through June 30th, reports are to be completed and submitted between July 1st and July 7th.
- For the period covering July 1st through September 30th, reports are to be completed and submitted between October 1st and October 7th.
- For the period covering October 1st through December 31st, reports are to be completed and submitted between January 1st and January 7th.

The quarterly report shall include, but not be limited to:

1. the Respondent's name;
2. license number;
3. auditor's name and signature;
4. auditor's license number;
5. dates Respondent had face-to-face contact or correspondence (written and verbal) with auditor;
6. the Respondent's compliance with this condition;
7. the Respondent's compliance with accepted auditing/accounting standards and practices;
8. any change in behavior and/or personal habits;
9. assessment of the Respondent's ability to practice safely;
10. recommendation dependant on Respondent's audit results and compliance with this conditon on whether to continue with current audit plan, modify plan, or require Respondent to cease practice;
11. other relevant information deemed necessary by the auditor, or the Board.

Respondent is ultimately responsible for ensuring his/her auditor submits complete and timely reports. Failure to ensure each auditor submits complete and timely reports shall constitute a violation of probation.

If the auditor resigns or is no longer available, Respondent shall, within five (5) days of such resignation or unavailability, submit to the Board or its designee, for prior approval, the names and qualifications of a replacement third party auditor who will be assuming that responsibility within 15 calendar days. If Respondent fails to obtain approval of a replacement auditor within 60 calendar days of the resignation or unavailability of the auditor, Respondent shall receive a notification from the Board or its designee to cease the practice of optometry within three (3) calendar days. After being so notified, Respondent shall cease practice until a replacement auditor is approved and assumes auditing responsibility.

~~10.~~33. LENS PRESCRIPTIONS - MAINTAIN RECORDS

Respondent shall maintain patient records ~~a record~~ of all lens prescriptions dispensed or administered by ~~r~~Respondent during probation, showing all the following:

1. name and address of the patient;
2. date;
3. price of the services and goods involved in the prescription;
4. visual impairment identified for which the prescription was furnished.

Respondent shall keep these patient records in a separate file ~~or ledger~~, in chronological order, and shall make them available for inspection and copying by the Board or its designee, upon request.

~~21. Third Party Presence. Sexual Transgressions~~

~~During probation, respondent shall have a third party present while examining or treating female/male/minor/patients. The third party individual or individuals authorized for this purpose may be subject to approval by the Board or its designee. Any costs incurred for compliance with this term shall be paid by the respondent.~~

~~NOTE: Sexual transgressors should normally be placed in a monitoring environment.~~

~~22.~~34. RESTRICTED PRACTICE ~~INCOMPETENCE~~

During probation, ~~r~~Respondent is prohibited from practicing (Ex. Specified optometric procedures).

~~24.~~35. RESTRICTION ~~AS TO~~ ON BRANCH OFFICES

During the period of probation, ~~the~~ ~~r~~Respondent shall be restricted as to the number and location of branch offices that the ~~r~~Respondent may operate or in which the ~~r~~Respondent may have any proprietary interest as designated and approved in writing by the Board.

~~25.~~36. RESTRICTIONS ~~AS TO~~ ON ADVERTISEMENTS

During the entire period of probation, the ~~r~~Respondent shall, prior to any publication or public dissemination, submit any and all advertisement of professional services in the field of optometry to the Board for its prior approval. Such advertisement may be published or disseminated to the public only after written approval by the Board.

37. TAKE AND PASS NBEO EXAM

Respondent shall take and pass part(s) of the National Board of Examiners of Optometry (NBEO). Respondent shall pay the established examination fees. If Respondent has not taken and passed the examination within twelve months from the effective date of this decision, Respondent shall be considered to be in violation of probation.

38. CONTINUING EDUCATION

Within ~~90~~ 30 calendar days of the effective date of this decision, Respondent shall submit to the Board for its prior approval an educational program or course to be in areas of (Eg., practice management, retinal disease, drug/alcohol addiction). The education program or course(s) shall consist of a minimum of four (4) hours for each practice area.

This program or course shall be in addition to the Continuing Optometric Education requirements for renewal, and shall be obtained with all costs being paid by the Respondent. Following completion of each course, the Board or its designee may administer an examination to test Respondent's knowledge of the course. Respondent shall provide written proof of attendance in such course or courses approved by the Board.

39. MEDICAL RECORD KEEPING COURSE

Within 60 calendar days of the effective date of this decision, Respondent shall enroll in a course in medical record keeping equivalent to the Medical Record Keeping Course offered by the Physician Assessment and Clinical Education Program, University of California, San Diego School of Medicine (Program), approved in advance by the Board or its designee. Respondent shall provide the program with any information and documents that the Program may deem pertinent. Respondent shall participate in and successfully complete the classroom component of the course not later than six (6) months after Respondent's initial enrollment. Respondent shall successfully complete any other component of the course within one (1) year of enrollment. The medical record keeping course shall be at Respondent's expense and shall be in addition to the continuing optometric education requirements for renewal of licensure.

A medical record keeping course taken after the acts that gave rise to the charges in the accusation, but prior to the effective date of the decision may, in the sole discretion of the Board or its designee, be accepted towards the fulfillment of this condition if the course would have been approved by the Board or its designee had the course been taken after the effective date of this decision.

Respondent shall submit a certification of successful completion to the Board or its designee not later than 15 calendar days after the effective date of the decision, whichever is later.

RECOMMENDED DISCIPLINE BASED ON VIOLATION

~~**Specific Probationary Conditions**~~

The following is an attempt to provide information regarding violations of statutes and regulations under the jurisdiction of the California State Board of Optometry and the appropriate range of penalties for each violation. Each discipline listed corresponds with a number under the chapters:

- Probationary Terms and Condition – Standard Terms and Conditions;
- Standard Alcohol/Drug Conditions; and
- Optional Conditions

Examples are given for illustrative purposes, but no attempt is made to list all possible violations. Optional conditions listed are those the Board deems most appropriate for the particular violation.

Excessive Prescribing (B&P Code sec. 725).

Maximum Discipline: Revocation and Cost Recovery

Minimum ~~Penalty~~ Discipline: Stayed Revocation, ~~at least~~ 3-5 years probation

~~**Maximum Penalty**: Revocation~~

Required:

1-16. Standard Conditions

~~1.~~ 33. Lens Prescription- Maintain ~~r~~Records ~~of prescription for review [10]~~

39. Medical Record Keeping Course

If Warranted:

~~2. If warranted,~~ 25. Suspension of 30 days or more ~~[7]~~

~~3. If warranted,~~ 22. Worksite Monitor~~ing~~ ~~[20]~~

~~4. If warranted,~~ 24. Remedial Education ~~course [14]~~

~~5. If warranted, Community service [13]~~

38. Continuing Education

Violation of Prescription Standards: Information Required (B&P Code sec. 3025.5; 3041; Title 16 CCR sec. 1565)

Maximum Discipline: Revocation and Cost Recovery

Minimum ~~Penalty~~ Discipline: Stayed Revocation, ~~at least~~ 3-5 years probation

~~**Maximum Penalty**: Revocation~~

Required:

1-16. Standard Conditions

~~1.~~ 33. Maintain ~~r~~Records ~~of prescription for review [10]~~

39. Medical Record Keeping Course

If Warranted:

~~2. If warranted,~~ 25. Suspension of 30 days or more ~~[7]~~

~~3. If warranted,~~ 22. Worksite Monitor~~ing~~ ~~[20]~~

~~4. If warranted,~~ 24. Remedial Education ~~course [14]~~

~~5. If warranted, Community service [13]~~

38. Continuing Education

Excessive Prescribing or Treatment~~s~~ (B&P Code sec. 725; 3110(n); 3110 (o))

Maximum Discipline: Revocation and Cost Recovery

Minimum ~~Penalty~~ Discipline: Stayed Revocation, ~~at least~~ 3-5 years probation

~~**Maximum Penalty**: Revocation~~

Required:

1-16. Standard Conditions

33. Lens Prescriptions – Maintain Records

38. Continuing Education
39. Medical Record Keeping Course

If Warranted:
1. 24. Remedial Education course [14]
2. If warranted, 25. Suspension of 30 days or more [7]
3. If warranted, 22. Worksite Monitoring [20]
4. If warranted, 34. Restricted pPractice [22]

Sexual Misconduct (B&P Code sec. 726)
Maximum Discipline: Revocation and Cost Recovery
Minimum Penalty Discipline: Stayed Revocation, at least 3 years probation Revocation
Maximum Penalty: Revocation
1. Psychiatric or psychological evaluation [16][17]
2. Education course [14]
3. Require third party present [21]
4. If warranted, Suspension of 30 days or more [7]
5. If warranted, Monitoring [20]

Mental or Physical Fitness (B&P Code sec. 820; 3097)
Maximum Discipline: Revocation and Cost Recovery
Minimum Penalty Discipline: Stayed Revocation, at least 3-5 years probation
Maximum Penalty: Revocation
Required:
1-16. Standard Conditions
3. If warranted, 28. Psychiatric or psychological Mental Health eEvaluation [16][17]
If Warranted:
25. Suspension
1. If warranted, 34. Restricted pPractice [22]
2. If warranted, 22. Worksite Monitoring [20]
27. Psychotherapy or Counseling Program
4. If warranted, 29. Medical eEvaluation [18][19]
30. Medical Treatment

Gross Negligence & Inefficiency (B&P Code sec. 3090 3110 (b); Title 16 CCR sec. 1510)
Maximum Discipline: Revocation and Cost Recovery
Minimum Penalty Discipline: Stayed Revocation, at least 3-5 years probation
Maximum Penalty: Revocation
Required:
1-16. Standard Conditions
1. Re-examination [15]
2. 24. Remedial Education course [14]
5. If warranted, 22. Worksite Monitoring [20]
If Warranted:
23. Direct Supervision
4. If warranted, 25. Suspension of 30 days or more [7]]
26. Employment Limitations
3. If warranted, 34. Restricted pPractice [22]
31. Restitution
36. Restrictions on Advertisements
37. Take and Pass NBEO Exam
39. Medical Record Keeping Course

Failure to Refer Patient (B&P Code sec. 3109 3110(y); 3041)

Maximum Discipline: Revocation and Cost Recovery
Minimum ~~Penalty~~ Discipline: Stayed Revocation, ~~at least~~ 3-5 years probation
~~**Maximum Penalty**: Revocation~~

Required:
1-16. Standard Conditions
~~1. Re-examination [15]~~
38. Continuing Education

If Warranted:
~~2.~~ 24. Remedial Education ~~course [14]~~
~~3. If warranted,~~ 34. Restricted ~~p~~Practice ~~[22]~~
~~4. If warranted,~~ 25. Suspension of 30 days or more ~~[7]~~]
~~5. If warranted,~~ 22. Worksite Monitor~~ing~~ ~~[20]~~
26. Employment Limitations
39. Medical Record Keeping Course

~~**Ophthalmic Devices,**~~ **Violation of Quality Standards for Prescription Ophthalmic Devices** (B&P Code sec. 2541.3; Title 16 CCR sec. 1519)

Maximum Discipline: Revocation and Cost Recovery
Minimum ~~Penalty~~ Discipline: Stayed Revocation, ~~at least~~ 3-5 years probation
~~**Maximum Penalty**: Revocation~~

Required:
1-16. Standard Conditions
~~1. Reexamination [15]~~
~~2.~~ 24. Remedial Education ~~course [14]~~

If Warranted:
~~3. If warranted,~~ 34. Restricted ~~p~~Practice ~~[22]~~
~~4. If warranted,~~ 25. Suspension of 30 days or more ~~[7]~~]
~~5. If warranted,~~ 22. Worksite Monitor~~ing~~ ~~[20]~~
37. Take and Pass NBEO Exam
39. Medical Record Keeping Course

Violation of ~~Sanitary~~ Health and Safety Standards (B&P Code sec. 3025.5; Title 16 CCR sec. 1520)

Maximum Discipline: Revocation and Cost Recovery
Minimum ~~Penalty~~ Discipline: Stayed Revocation, ~~at least~~ 3-5 years probation
~~**Maximum Penalty**: Revocation~~

Required:
1-16. Standard Conditions
~~1. Reexamination [15]~~
38. Continuing Education

If Warranted:
~~2.~~ 24. Remedial Education ~~course [14]~~
~~3. If warranted,~~ 34. Restricted ~~p~~Practice ~~[22]~~
~~4. If warranted,~~ 25. Suspension of 30 days or more ~~[7]~~]
~~5. If warranted,~~ 22. Worksite Monitor~~ing~~ ~~[20]~~
39. Medical Record Keeping Course

Failure to Follow Infection Control Guidelines (B&P Code sec. 3110(w))

Maximum Discipline: Revocation and Cost Recovery
Minimum Discipline: Stayed Revocation, 3-5 years probation

Required:
1-16. Standard Conditions
22. Worksite Monitor

38. Continuing Education

If Warranted:

23. Direct Supervision
24. Remedial Education
25. Suspension

Violations Regarding Topical Pharmaceutical Agents (B&P Code sec. 3041.2; Title 16 CCR sec. 1560; 1561; 1562; 1563)

Maximum Discipline: Revocation and Cost Recovery

Minimum ~~Penalty~~ Discipline: Stayed Revocation, ~~at least~~ 3-5 years probation

~~**Maximum Penalty**: Revocation~~

Required:

1-16. Standard Conditions
~~1. Reexamination [15]~~
38. Continuing Education

If Warranted:

~~2.~~ 24. Remedial Education ~~course [14]~~
~~3. If warranted,~~ 34. Restricted ~~p~~Practice ~~[22]~~
~~4. If warranted,~~ 25. Suspension of 30 days or more ~~[7]~~
~~5. If warranted,~~ 22. Worksite Monitor~~ing~~ ~~[20]~~

~~**Unprofessional Conduct. Dishonesty and**~~ **Fraud, Misrepresentation or Dishonesty** (B&P Code sec. 810; ~~3090;~~ 3101; 3110 (e) ~~3126; 3127~~)

Maximum Discipline: Revocation and Cost Recovery

Minimum ~~Penalty~~ Discipline: Stayed Revocation, ~~at least~~ 3-5 years probation

~~**Maximum Penalty**: Revocation~~

Required:

1-16. Standard Conditions
~~1. Reexamination [15]~~
~~2.~~ 24. Remedial Education ~~course [14]~~
32. Audit Required
39. Medical Record Keeping Course

If Warranted:

~~2. If warranted,~~ 25. Suspension of 30 days or more ~~[7]~~]
~~3. If warranted, Community service [13]~~
22. Worksite Monitor
23. Direct Supervision
26. Employment Limitations
31. Restitution
36. Restrictions on Advertisements
38. Continuing Education

Procuring a License by Fraud (B&P Code sec. 123; 496; 3110(i) ~~3095~~; ~~3126~~)

Maximum Discipline: Denial or Revocation

Minimum ~~Penalty~~ Discipline: Denial or Revocation

~~**Maximum Penalty:** Denial or Revocation~~

~~**Practice During Suspension** (B&P Code sec. 3127)~~

~~**Minimum Penalty:** Revocation~~

~~**Maximum Penalty:** Revocation~~

Practicing without Valid License (B&P Code sec. 3110(s); 3110(i))

Maximum Discipline: Revocation and Cost Recovery

Minimum Discipline: Stayed Revocation, 3-5 years probation

Required:
1-16. Standard Conditions
If Warranted:
22. Worksite Monitor
25. Suspension
36. Restrictions on Advertisements
38. Continuing Education

~~**Alcohol Abuse**~~ **Using Controlled Substances or Alcohol** (B&P Code sec. ~~820~~ 3110 (l))
Maximum Discipline: Revocation and Cost Recovery
Minimum ~~Penalty~~ Discipline: Stayed Revocation, ~~at least~~ 3-5 years probation
~~**Maximum Penalty**: Revocation~~
Required:
1-16. Standard Conditions
17-18. Standard Alcohol/Drug Conditions
~~1. Reexamination [15]~~
~~2. Abstain from drugs [8, 9]~~
~~3. Biological fluid testing [12]~~
If Warranted:
~~4.~~ 21. ~~Drug or~~ Alcohol and Drug ~~Counseling and~~ Treatment ~~[23]~~
~~5. If warranted,~~ 25. Suspension of 30 days or more ~~[7]~~
~~6. If warranted,~~ 22. Worksite Monitor~~ing~~ ~~[20]~~
22. Direct Supervision
~~7. If warranted,~~ 34. Restricted ~~p~~Practice ~~[22]~~
26. Employment Limitations
27. Psychotherapy or Counseling Program
28. Mental Health Evaluation
29. Medical Health Evaluation
30. Medical Treatment
38. Continuing Education

~~**Aiding and Abetting Unlicensed Practice**~~ **Employing Suspended or Unlicensed Optometrist** (B&P Code sec. ~~3102~~ 3110 (t); 3106)
Permitting Another to Use License(B&P Code sec. ~~3102~~ 3110 (u); 3106)
Maximum Discipline: Revocation and Cost Recovery
Minimum ~~Penalty~~ Discipline: Stayed Revocation, ~~at least~~ 3-5 years probation
~~**Maximum Penalty**: Revocation~~
Required:
1-16. Standard Conditions
~~2. Re-examination [15]~~
If Warranted:
~~3. If warranted,~~ 35. Restrictions on ~~number of~~ ~~b~~Branch ~~o~~Offices ~~[24]~~
~~4. If warranted,~~ 25. Suspension of 30 days or more ~~[7]~~]
~~5 If warranted,~~ 22. Worksite Monitor~~ing~~ ~~[20]~~
~~6. If warranted,~~ 34. Restricted ~~p~~Practice ~~[22]~~
26. Employment Limitations
38. Continuing Education

Accept~~ance~~ing ~~of Unlawful~~ Employment By Unlicensed Person (B&P Code sec. 310~~3~~9)
Maximum Discipline: Revocation and Cost Recovery
Minimum ~~Penalty~~ Discipline: Stayed Revocation, ~~at least~~ 3-5 years probation
~~**Maximum Penalty**: Revocation~~
Required:
1-16. Standard Conditions
~~1.~~ 38. Continuing Education ~~course [14]~~
~~2. Re-examination [15]~~

If Warranted:

~~3.~~ 25. Suspension of 30 days or more ~~[7]~~]

Unlawful Location for Practice (B&P Code sec. 3070; 3075; 3076; 3077; Title 16 CCR sec. 1505; 1506; 1507)

Maximum Discipline: Revocation and Cost Recovery

Minimum ~~Penalty~~ Discipline: Stayed Revocation, ~~at least~~ 3-5 years probation

~~**Maximum Penalty**: Revocation~~

Required:

1-16. Standard Conditions

~~1.~~ 38. Continuing Education ~~course [14]~~

~~2. Re-examination [15]~~

If Warranted:

~~3. If warranted,~~ 35. Restrictions on ~~number of b~~Branch ~~o~~Offices ~~[24]~~

~~4. If warranted,~~ 25. Suspension of 30 days or more ~~[7]~~]

~~5 If warranted,~~ 22. Worksite Monitor~~ing~~ ~~[20]~~

~~6. If warranted,~~ 34. Restricted ~~p~~Practice ~~[22]~~

Deceptive Advertising (B&P Code sec 651; 651.3; 3099 ; 3100; ~~3104~~; ~~3129~~ 3102; ~~3130~~ 3103; 3110(g); 17500; Title 16 CCR sec. 1512; 1513; 1514; 1515)

Maximum Discipline: Revocation and Cost Recovery

Minimum ~~Penalty~~ Discipline: Stayed Revocation, ~~at least~~ 3-5 years probation

~~**Maximum Penalty**: Revocation~~

Required:

1-16. Standard Conditions

~~1.~~ 38. Continuing Education ~~course [14]~~

~~2. Re-examination [15]~~

If Warranted:

~~3. If warranted,~~ 25. Suspension of 30 days or more ~~[7]~~

~~4. If warranted,~~ 36. Restrictions on ~~Submit a~~Advertisements ~~for prior approval [25]~~

~~5. If warranted, Community service [13]~~

Prohibited Arrangements by Optometrists (B&P Code sec 655; Title 16 CCR sec. 1514)

Maximum Discipline: Revocation and Cost Recovery

Minimum ~~Penalty~~ Discipline: Stayed Revocation, ~~at least~~ 3-5 years probation

~~**Maximum Penalty**: Revocation~~

Required:

1-16. Standard Conditions

~~1.~~ 38. Continuing Education ~~course [14]~~

If Warranted:

~~2. Re-examination [15]~~

~~3. If warranted,~~ 25. Suspension of 30 days or more ~~[7]~~

~~4. If warranted,~~ 36. Restrictions on ~~Submit a~~Advertisements ~~for prior approval [25]~~

~~5. If warranted, Community service [13]~~

~~**Holding Out Without Certificate**~~ **Advertising While Not Holding Valid License** (B&P Code sec. ~~3128~~ 3101)

Maximum Discipline: Revocation and Cost Recovery

Minimum ~~Penalty~~ Discipline: Stayed Revocation, ~~at least~~ 3-5 years probation

~~**Maximum Penalty**: Revocation~~

Required:

1-16. Standard Conditions

~~1.~~ 38. Continuing Education ~~course [14]~~

If Warranted:

~~2. Re-examination [15]~~
~~3. If warranted,~~ 25. Suspension of 30 days or more ~~[7]~~
~~5. If warranted, Community service [13]~~]
36. Restrictions on Advertisements

Misuse of Professional Titles or Abbreviations (B&P Code sec. 3098; Title 16 CCR sec. 1512)

Maximum Discipline: 6-month suspension. Revocation for successive violation

Minimum ~~Penalty~~ Discipline: 30 days ~~stayed,~~ suspension, and at least one-year probation

~~**Maximum Penalty Discipline:** 6-month suspension. Revocation for successive violation~~

Required:
1-16. Standard Conditions
~~1.~~ 38. Continuing Education ~~course [14]~~
~~2. Re-examination [15]~~

If Warranted:
~~3. If warranted,~~ 25. Suspension of 30 days or more ~~[7]~~
~~4. If warranted, Community service [13]~~
36. Restrictions on Advertisements

Unlawful Solicitation (B&P Code sec. ~~3096~~ 3097)

Maximum Discipline: Revocation and Cost Recovery

Minimum ~~Penalty~~ Discipline: Stayed Revocation, ~~at least~~ 3-5 years probation

~~**Maximum Penalty**: Revocation~~

Required:
1-16. Standard Conditions
~~1.~~ 38. Continuing Education ~~course [14]~~
~~2. Re-examination [15]~~

If Warranted:
~~3. If warranted,~~ 25. Suspension of 30 days or more ~~[7]~~
~~4. If warranted, Community service [13]~~
~~5 If warranted,~~ 22. Worksite Monitor~~ing~~ ~~[20]~~
~~6. If warranted,~~ 34. Restricted practice ~~[22]~~

Unlawful Referrals (B&P Code sec. 650; 650.01)

Maximum Discipline: Revocation and Cost Recovery

Minimum ~~Penalty~~ Discipline: Stayed Revocation, ~~at least~~ 3-5 years probation

~~**Maximum Penalty**: Revocation~~

Required:
1-16. Standard Conditions

If Warranted:
~~1.~~ 38. Continuing Education ~~course [14]~~
~~2. Re-examination [15]~~
~~3. If warranted,~~ 25. Suspension of 30 days or more ~~[7]~~
~~4. If warranted, Community service [13]~~
~~5. If warranted,~~ 22. Worksite Monitor~~ing~~ ~~[20]~~
~~6. If warranted,~~ 34. Restricted practice ~~[22]~~
36. Restrictions on Advertisements

Employ~~ment~~ing ~~of~~ Cappers or Steerers (B&P Code sec. ~~3100~~ 3104)

Maximum Discipline: Revocation and Cost Recovery

Minimum ~~Penalty~~ Discipline: Stayed Revocation, ~~at least~~ 3-5 years probation

~~**Maximum Penalty**: Revocation~~

Required:
1-16. Standard Conditions

~~1.~~ 38. Continuing Education ~~course [14]~~
~~2. Re-examination [15]~~

If Warranted:

~~3. If warranted,~~ 25. Suspension of 30 days or more ~~[7]~~
~~4. If warranted, Community service [13]~~
~~5 If warranted,~~ 22. Worksite Monitor~~ing~~ ~~[20]~~
~~6. If warranted,~~ 34. Restricted practice ~~[22]~~
36. Restrictions on Advertisements

Criminal Conviction (B&P Code sec. 3094; 3107; Title 16 CCR sec. 1517)

Maximum Discipline: Revocation and Cost Recovery
Minimum ~~Penalty~~ Discipline: Stayed Revocation, ~~at least~~ 3-5 years probation
~~**Maximum Penalty**: Revocation~~
~~Terms and conditions depend on the nature of the criminal conviction~~

Required:

1-16. Standard Conditions

If Warranted:

~~1.~~ 24. Remedial Education ~~course [14]~~
~~2. If warranted, Reexamination [15]~~
~~3. If warranted,~~ 25. Suspension of 30 days or more ~~[7]~~
~~4. If warranted, Community service [13]~~
~~5. If warranted,~~ 22. Worksite Monitor~~ing~~ ~~[20]~~
~~6. If warranted,~~ 34. Restricted practice ~~[22]~~
~~7. If drug related and warranted (see conditions for drug abuse)~~ 17-18. Standard Alcohol/ Drug Conditions
~~8. If related to sexual misconduct and warranted (see conditions for sexual misconduct)~~
38. Continuing Education

Fictitious Name Violation (B&P Code sec. ~~3125~~ 3078; Title 16 CCR sec. 1513; 1518)

Maximum Penalty: 6 month Suspension. Revocation and Cost Recovery for successive violations
Minimum ~~Penalty~~ Discipline: ~~30 days stayed. Suspension, and at least one-year probation on the standard conditions~~ Stayed Revocation, 3 years probation
~~**Maximum Penalty:** 6-month suspension. Revocation for successive violation.~~

Required:

1-16. Standard Conditions
38. Continuing Education

If Warranted:

36. Restrictions on Advertisements

Violation of Probation

Maximum Discipline: Impose discipline that was stayed
Minimum ~~Penalty~~ Discipline: Impose an actual period of suspension
~~**Maximum Penalty:** Impose penalty that was stayed.~~

The maximum ~~penalty~~ discipline should be given for repeated similar offenses or for probation violations revealing a cavalier or recalcitrant attitude. Other violations of probation should draw at least a period of actual suspension.

Violations by Professional Corporations (B&P Code sec. 3160; 3161; 3162; 3163; 3164; 3165; 3166; Title 16 CCR sec. 1544; 1546; 1547; 1548; 1549; 1550)

Maximum Discipline: Revocation and Cost Recovery
Minimum ~~Penalty~~ Discipline: Stayed Revocation, ~~at least~~ 3-5 years probation
~~**Maximum Penalty**: Revocation~~

Required:

1-16. Standard Conditions

If Warranted:

~~1. If warranted.~~ 24. Remedial Education ~~c~~Course for corporate principals involved [~~14~~]

~~2. If warranted. Reexamination for corporate principals involved [15]~~

~~3. If warranted,~~ 25. Suspension of 30 days or more ~~for corporate license and the license of any corporate principal involved [7]~~

~~4. If warranted, Community service for corporate principals [13]~~

~~5.~~ 22. Worksite Monitor~~ing~~ ~~[20]~~

~~6. If warranted,~~ 34. Restricted practice ~~[22]~~

31. Restitution

36. Restrictions on Advertisements

38. Continuing Education

Fraudulently Altering Medical Records (B&P Code sec. 3105)

Maximum Discipline: Revocation and Cost Recovery

Minimum Discipline: Stayed Revocation, 3-5 years probation

Required:

1-16. Standard Conditions.

38. Continuing Education

39. Medical Record Keeping Course

If Warranted:

22. Worksite Monitor

23. Direct Supervision

25. Suspension

32. Audit Required

False Representation of Fact (B&P Code sec. 3106)

Maximum Discipline: Revocation and Cost Recovery

Minimum Discipline: Stayed Revocation, 3-5 years probation

Required:

1-16. Standard Conditions

If Warranted:

23. Direct Supervision

24. Remedial Education

25. Suspension

26. Employment Limitations

31. Restitution

32. Audit Required

34. Restricted Practice

35. Restrictions on Branch Offices

36. Restrictions on Advertisements

38. Continuing Education

39. Medical Record Keeping Course

Unprofessional Conduct (B&P code sec. 3110)

Maximum Discipline: Revocation and Cost Recovery

Minimum Discipline: Stayed Revocation, 5 years probation

Required:

1-16. Standard Conditions

22. Worksite Monitor

24. Remedial Education

If Warranted:

23. Direct Supervision

25. Suspension
26. Employment Limitations
38. Continuing Education
39. Medical Record Keeping Course

Violating or abetting violation of any section of Optometry Practice Act (B&P Code sec. 3110(a))

Maximum Discipline: Revocation and Cost Recovery
Minimum Discipline: Stayed Revocation, 5 years probation

Required:
1-16. Standard Conditions
24. Remedial Education

If Warranted:
22. Worksite Monitor
23. Direct Supervision
25. Suspension
26. Employment Limitations
31. Restitution
32. Audit Required
36. Restrictions on Advertisements
38. Continuing Education
39. Medical Record Keeping Course

Repeated Negligent Acts (B&P Code sec. 3110 (c))

Maximum Discipline: Revocation and Cost Recovery
Minimum Discipline: Revocation and Cost Recovery

Incompetence (B&P Code sec. 3110 (d))

Maximum Discipline: Revocation and Cost Recovery
Minimum Discipline: Stayed Revocation, 3-5 years probation

If Required:
1-16. Standard Conditions
22. Worksite Monitor
23. Direct Supervision
24. Remedial Education
25. Suspension
26. Employment Limitations

If Warranted:
37. Take and Pass NBEO Exam
39. Medical Record Keeping Course

Conduct Warranting License Denial (B&P Code sec. 3110 (f))

Maximum Discipline: Revocation and Cost Recovery
Minimum Discipline: Stayed Revocation, 3-5 years probation

Required:
1-16. Standard Conditions

If Warranted:
17-18. Standard Alcohol/ Drug Conditions
21. Alcohol or Drug Treatment
22. Worksite Monitor
23. Direct Supervision
24. Remedial Education
25. Suspension

26. Employment Limitations
27. Psychotherapy or Counseling Program
28. Mental Health Evaluation
31. Restitution
32. Audit Required
33. Lens Prescription – Maintain Records
36. Restrictions on Advertisements
37. Take and Pass NBEO Exam
38. Continuing Education
39. Medical Record Keeping Course

License Discipline by Other State or Agency (B&P Code sec. 3110 (h))

Maximum Discipline: Revocation and Cost Recovery

Minimum Discipline: Stayed Revocation, 3-5 years probation

Required:

1-16. Standard Conditions

If Warranted:

17-18. Standard Alcohol/ Drug Conditions
21. Alcohol or Drug Treatment
22. Worksite Monitor
23. Direct Supervision
24. Remedial Education
25. Suspension
26. Employment Limitations
27. Psychotherapy or Counseling Program
28. Mental Health Evaluation
32. Audit Required
33. Lens Prescription – Maintain Records
37. Take and Pass NBEO Exam
38. Continuing Education
39. Medical Record Keeping Course

Making False Statement on Application (B&P Code sec. 3110 (j))

Maximum Discipline: Revocation and Cost Recovery

Minimum Discipline: Stayed Revocation, 3-5 years probation

Required:

1-16. Standard Conditions

If Warranted:

22. Worksite Monitor
24. Remedial Education
25. Suspension
26. Employment Limitations
38. Continuing Education

Prescribing, Furnishing, or Administering Drugs without Good Faith Examination (B&P Code sec. 3110 (p))

Maximum Discipline: Revocation and Cost Recovery

Minimum Discipline: Stayed Revocation, 3-5 years probation

Required:

1-16. Standard Conditions
24. Remedial Education
25. Suspension

If Warranted:

22. Worksite Monitor

23. Direct Supervision
38. Continuing Education
39. Medical Record Keeping Course

Failure to Maintain Adequate Records(B&P Code sec. 3110 (g))
Maximum Discipline: Revocation and Cost Recovery
Minimum Discipline: Stayed Revocation, 3-5 years probation
Required:
1-16. Standard Conditions
39. Medical Record Keeping Course

If Warranted:
22. Worksite Monitor
24. Remedial Education
25. Suspension
32. Audit Required
38. Continuing Education

Altering or Using Altered License (B&P Code sec. 3110 (v))
Maximum Discipline: Revocation and Cost Recovery
Minimum Discipline: Stayed Revocation, 3-5 years probation
Required:
1-16. Standard Conditions
22. Worksite Monitor
25. Suspension
If Warranted
38. Continuing Education

Professional Services Beyond the Scope of the License (B&P Code sec. 3110 (r))
Maximum Discipline: Revocation and Cost Recovery
Minimum Discipline: Stayed Revocation, 3-5 years probation
Required:
1-16. Standard Conditions
If Warranted:
22. Worksite Monitor
24. Remedial Education
25. Suspension
26. Employment Limitations
38. Continuing Education

Failure to Comply with Patient Records Request (B&P Code sec. 3110 (x))
Maximum Discipline: Revocation and Cost Recovery
Minimum Discipline: Stayed Revocation, 3-5 years probation
Required:
1-16. Standard Conditions
39. Medical Record Keeping Course

If Warranted:
24. Remedial Education
38. Continuing Education

Use of Fraudulently issued, counterfeited, etc., Certificate (B&P Code 3107)
Maximum Discipline: Revocation and Cost Recovery
Minimum Discipline: Stayed Revocation, 3-5 years probation
Required:

1-16. Standard Conditions

If Warranted:

22. Worksite Monitor
24. Remedial Education
25. Suspension
26. Employment Limitations
38. Continuing Education

CALIFORNIA STATE BOARD OF OPTOMETRY
2450 DEL PASO ROAD, SUITE 105, SACRAMENTO, CA 95834
P (916) 575-7170 F (916) 575-7292 www.optometry.ca.gov

Agenda Item 7B, Attachment 8

CALIFORNIA STATE BOARD OF OPTOMETRY

RESOLUTION

DELEGATION TO DEPARTMENT OF CONSUMER AFFAIRS FOR THE REVIEW AND REGISTRATION OF SPONSORING ENTITIES

Whereas, Section 901 of the Business and Professions Code (Bus. & Prof. Code § 901), which relates to sponsored health care events, requires that an entity desiring to sponsor such an event must first register with the appropriate board within the Department of Consumer Affairs (Department); and,

Whereas, a sponsored event may utilize many healthcare license disciplines, including physicians, physician assistants, registered nurses, and other professionals; and,

Whereas, the California State Board of Optometry (Board) is the appropriate board to register sponsored health care events utilizing the services of optometrists; and ,

Whereas, the Board, to implement the provisions of Bus. & Prof. Code § 901, has adopted regulations that authorize the Board by resolution to delegate to the Department the authority to receive registration forms and register sponsoring entities; and,

Whereas, the Department would therefore serve as the optimal central point to receive registration forms and to register sponsoring entities;

THEREFORE, BE IT RESOLVED that the Board hereby delegates to the Department the authority to receive sponsored entity registration forms and to register sponsoring entities for sponsored free health care events that utilize the services of optometrists.

Adopted this 18th day of May, 2012.

By

Lee A. Goldstein, OD, MPA
Board President

Memo

2450 Del Paso Road, Suite 105
Sacramento, CA 95834
(916) 575-7170, (916) 575-7292 Fax
www.optometry.ca.gov

To: Board Members **Date:** May 18, 2012

From: Jessica Sieferman
Probation Monitor/Enforcement Analyst **Telephone:** (916) 575-7184

Subject: **Agenda Item 8 – Enforcement Program Report**

Analyst Certification Training (ACT)

DCA's SOLID Training Solutions recently designed the ACT Program for experienced analysts, entry-level analysts, and clerical staff. The ACT Program is designed to provide analytical strategies, tools, and techniques such as analysis, data gathering, and reporting. In addition, it teaches strategies for effective oral and written communication, presentations, and project management. The ACT Program consists of six courses, and participants are required to give a 10-15 minute presentation prior to receiving their certification.

The entire Enforcement Unit will be participating in the ACT Program and expect to receive certifications by the end of the calendar year.

Data Clean-up Project

As previously reported, Enforcement Staff was preparing to clean up all of its data in the current CAS system in order to make the conversion to BreEZe as simple as possible. This project includes correcting action codes, Disciplinary Orders, Cost Recovery amounts, etc. Using the Board's retention schedule, staff will identify only the necessary data needed to convert to BreEZe. However, due to the necessity of the Exception Report Project explained below, priorities have shifted and this project has been put on hold.

Fingerprint Program
Lydia Bracco, Fingerprint Coordinator/Enforcement Analyst

The fingerprint regulations became effective June 21, 2010 and the first notification of the requirement was sent to licensees with their license renewal invoices in July of that year.

To date, the Board has received 157 RAP sheets from the Department of Justice (DOJ) and the Federal Bureau of Investigation (FBI). Staff has worked diligently to investigate the allegations against the optometrists by contacting law enforcement agencies and courts to request documents.

Based on the statute of limitations, the Board has seven years from the date of conviction or three years from the date the Board discovers the conviction – whichever comes first – to file an accusation against an Optometrist based on the conviction substantially related to the practice of optometry. For licensees with convictions outside the statute of limitations, the license application is reviewed to determine if it was signed after the conviction and, if so, did the licensee correctly answer the conviction statement question.

If a licensee failed to disclose a conviction, it would be a misrepresentation of fact on their application, for which there is no statute of limitation, and will be referred to the enforcement unit for further investigation.

As of May 14, 2012, there have been 406 rejected fingerprints for numerous reasons - mainly, the characteristics of their fingerprints are too low to be processed. In all rejection cases, staff sends a letter to the optometrist along with the rejection notice from the Department of Justice and/or the Federal Bureau of Investigation informing the licensee he/she must be re-printed. If the fingerprints are rejected three consecutive times, staff sends a request to the DOJ and/or FBI to have a "name search" completed.

The last notification of the requirement will be sent with the renewal invoices in July 2012, and that will complete a 2 year renewal cycle. In January 2013, Board staff will audit the fingerprint program to ensure all licensees have been fingerprinted. Those licensees who have yet to be fingerprinted will be notified by the Board.

Data Fingerprint Process

When a licensee/applicant is fingerprinted, the fingerprint record contains pieces of data that are electronically sent through multiple data bases. Each time a record is sent, via interface, each data base looks for specific pieces of data (i.e., Key Identifiers) to match the fingerprint record to the data base record. Those Key Identifiers include Last Name, First Name, Date of Birth (DOB), and Social Security Number (SSN). All Key Identifiers must be present and correct for records to match and complete the data transfer.

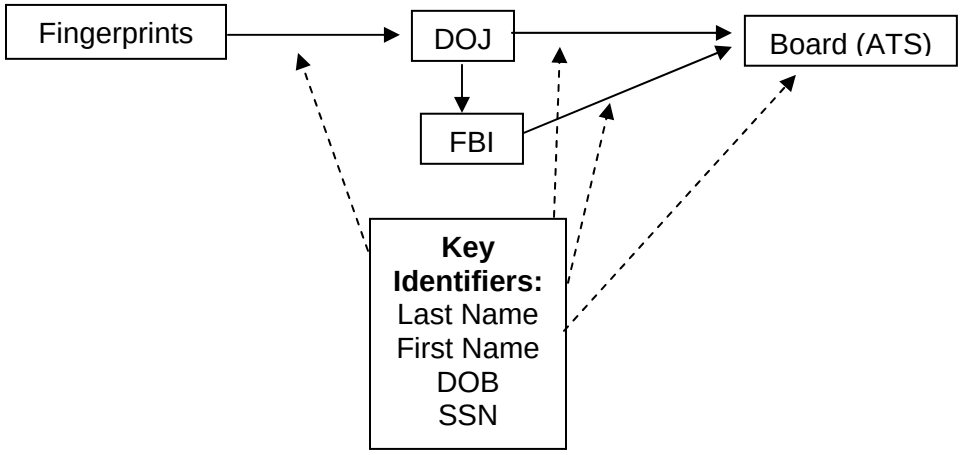

Exception Report:
When data connected to the results record does not match our database, the results are sent to a "holding cell" on our server and populated on an Exception Report. This report is meant to alert staff that additional data remains unassigned to a record in our database. Staff then finds the record, matches the data, and submits the results for data transfer.

Due to the lack of training on the data transfer process and the exception report, staff was unaware of the necessary steps needed to successfully transfer data from the exception report and into the correct record.

On March 19, 2012, Board staff, aware there was a problem with not receiving results, initiated a meeting with the Office Information Services (OIS). During that meeting, OIS ran the Board's exception report starting on March 19, 2010 through March 19, 2012. The report contained 651 pages of data exceptions. These exceptions included 144 rap sheet records and 95 rejected records.

Staff immediately took necessary steps to transfer the rap sheet records from the exception report. The Enforcement Unit opened 84 cases. Those cases past the statute of limitations (7 years from the date of conviction) were cross referenced with the conviction statement on each licensee's initial application. If properly disclosed, the cases were closed. 21 cases are pending investigation. Attachment #1 provides statistics tracking these specific conviction cases.

In addition, staff is contacting all licensees /applicants whose fingerprints were rejected. These licensees/applicants need to get re-fingerprinted.

As of May 14, 2012, the 651-page exception report is now down to 451 pages. Staff is working overtime and on weekends to resolve this issue as soon as possible. The goal for completing this project is July 1, 2012.

Effected Enforcement Statistics:

Statistics start from the date the complaint (in this case, the rap sheet notification) was received. Each rap sheet is electronically "date stamped" with the date it was sent to our database. While staff was unaware that rap sheets were received, many had been sent to the board as much as two years prior. When each case was opened, the "Received Date" in CAS corresponds to the date on the rap sheet. Therefore, statistics that were previously reported to the Board and to the Department over the last two years have changed.

In addition, as of April 2012, the average time it takes for Board intake to assign or close a record has changed significantly. The amount of time to complete an investigation will also be greatly impacted. Attachment 2 demonstrates this change. While the conviction cases impact the statistics, it should be noted that these timeframes are not typical for the Board. The average time it takes for Board intake to assign or close a record, for example, is generally 5-7 days as demonstrated in previous enforcement measures. Outside of the Exception Report Project, we are within the 5-7 day timeframe.

Staff will provide the Board with continuous updates as this exception report project progresses.

Probation Program

Effective May 8, 2012 and May 10, 2012, the Board received two new probationers. The orientations were conducted on May 11, 2012 at the DOI office in Ontario, CA.

Jessica Sieferman is constantly looking for new ways to improve the Board's Probation Program. Recently, she has made contact with Medical Board's Northern California Enforcement Chief, Susan Cady. Susan has shared valuable suggestions, tips, and information to improve our program including the Medical Record Keeping Course, worksite monitoring guidelines and forms.

The California Laws and Regulations Examination (CLRE) has been administered to seven probationers since the Board voted to add passing the CLRE as a standard probation condition. Of those, three have taken the exam twice. 43% of the probationers have passed the exam on their first attempt. 33% have passed on their second attempt.

Probation Statistics*

Active	Tolled	Total
10	6	**16**

Pending Petitions

Rev.of Prob.	Reinstatement	Early Term/Mod.
1	2	2

Since 2/14/12

Completed	Surrendered	Revoked
0	0	0

*Data subject to change upon completion of Data Clean-up Project

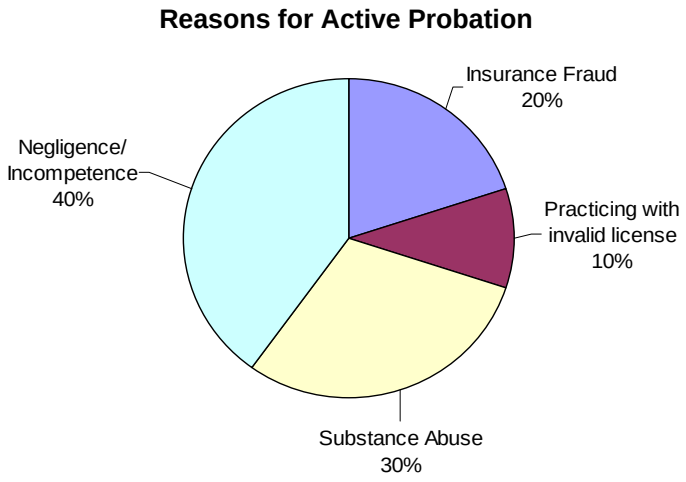

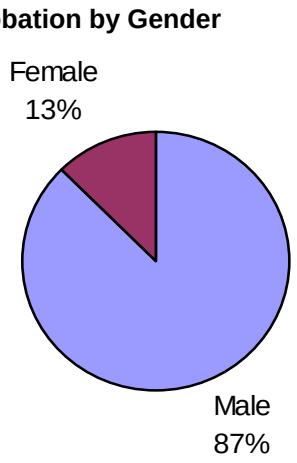

<u>Enforcement Statistics</u>

Due to the Data Cleanup Project and the Exception Report Project, the Board's statistics will change on a regular (and many times daily) basis. Therefore, staff will wait to present enforcement statistics until the next Board meeting when the Exception Report Project has been completed.

Attachments:

1. Opened Exception Cases From Exception Report
2. Complaint Intake Enforcement Measures

Attachment 1

Opened Conviction Cases from Exception Report

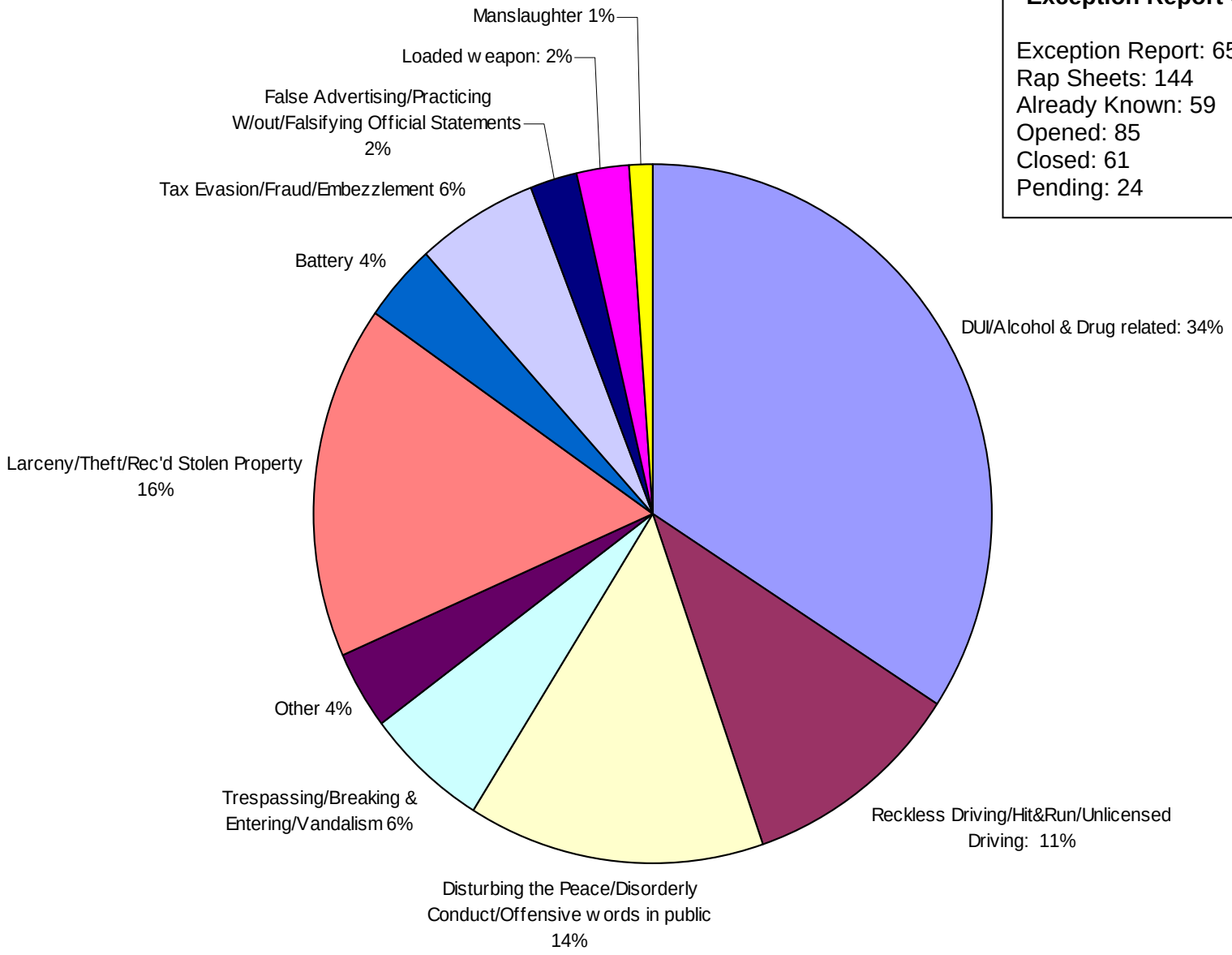

Exception Report Case Status

Exception Report: 651 pgs.
Rap Sheets: 144
Already Known: 59
Opened: 85
Closed: 61
Pending: 24

Complaint Intake Enforcement Measures

Attachment 2

COMPLAINTS	11-Jul	11-Aug	11-Sep	11-Oct	11-Nov	11-Dec	12-Jan	12-Feb	12-Mar	12-Apr	YTD
RECEIVED	41	24	13	11	12	14	15	16	17	24	187
CLOSED W/O INV ASSIGNMENT	6	2	2	2	2	0	2	0	2	1	19
ASSIGNED FOR INVESTIGATION	27	28	10	8	11	10	18	14	17	23	166
AVG DAYS TO CLOSE OR ASSIGN	8	7	5	4	5	8	10	9	8	19	9
PENDING	9	3	4	5	4	8	3	5	3	3	3

CONVICTIONS/ARREST REPORTS	11-Jul	11-Aug	11-Sep	11-Oct	11-Nov	11-Dec	12-Jan	12-Feb	12-Mar	12-Apr	YTD
RECEIVED	11	5	6	7	5	7	5	5	3	17	71
CLSD/ASSGND FOR INVESTIGATION	5	1	3	0	0	5	1	4	2	83	104
AVG DAYS TO CLOSE OR ASSIGN	5	1	4	0	0	5	3	3	3	265	212
PENDING	43	47	50	57	62	64	68	69	70	4	4

TOTAL INTAKE	11-Jul	11-Aug	11-Sep	11-Oct	11-Nov	11-Dec	12-Jan	12-Feb	12-Mar	12-Apr	YTD
RECEIVED	52	29	19	18	17	21	20	21	20	41	258
CLOSED W/O INV ASSIGNMENT	6	2	2	2	2	0	2	0	2	1	19
ASSIGNED FOR INVESTIGATION	32	29	13	8	11	15	19	18	19	106	270
AVG DAYS TO CLOSE OR ASSIGN	7	7	5	4	5	7	10	7	8	209	82
PENDING	52	50	54	62	66	72	71	74	73	7	7

CALIFORNIA STATE BOARD OF OPTOMETRY

Memo

2450 Del Paso Road, Suite 105
Sacramento, CA 95834
(916) 575-7170, (916) 575-7292 Fax
www.optometry.ca.gov

To: Board Members **Date:** May 18, 2012

From: Dr. Lee Goldstein, O.D.
Board President **Telephone:** (916) 575-7170

Subject: **Agenda Item 10 – Public Comment for Items Not on the Agenda**

The Board may not discuss or take action on any matter raised during this public comment section, except to decide whether to place the matter on the agenda of a future meeting [Government Code Sections 11125, 11125.7(a)].

CALIFORNIA STATE BOARD OF OPTOMETRY

Memo

2450 Del Paso Road, Suite 105
Sacramento, CA 95834
(916) 575-7170, (916) 575-7292 Fax
www.optometry.ca.gov

To: Board Members **Date:** May 18, 2012

From: Dr. Lee Goldstein, O.D.
Board President **Telephone:** (916) 575-7170

Subject: **Agenda Item 11– Suggestions for Future Agenda Items**

Members of the Board and the public may suggest items for staff research and discussion at future meetings.

CALIFORNIA STATE BOARD OF OPTOMETRY

Memo

2450 Del Paso Road, Suite 105
Sacramento, CA 95834
(916) 575-7170, (916) 575-7292 Fax
www.optometry.ca.gov

To: Board Members

Date: May 18, 2012

From: Dr. Lee Goldstein, O.D.
Board President

Telephone: (916) 575-7170

Subject: **Agenda Item 12 - Adjournment**